A MOBILITY
NETWORKS COMPANY

UK Version

Revision: 1.4.2
Year: 2021
BS:EN 1756-2-2004
and A1:2009

Instruction Manual

Access™ Van Lift

ACC-1150, ACC-1200, ACC-1280, ACC-1300, ACC-1380

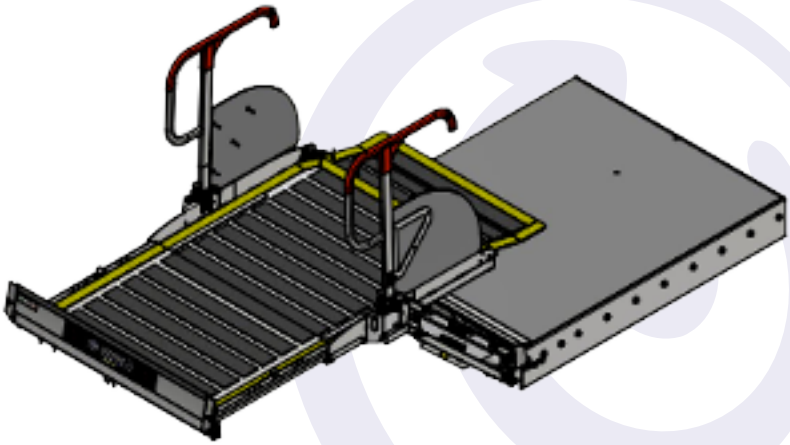

Access™
Van Lift

www.passengerliftservices.co.uk

1. GENERAL
1.1. Manufacturer
1.2. Markings
1.3. Using the Manual (symbols etc)
1.4. Operator Responsibility
1.5. Health & Safety (Scooters)

2. TECHNICAL
2.1. Main Components Access™ Van
2.2. Dimensions Access™ Van
2.3. Technical Data (Volts, PLS Blue)

3. PRODUCT USE:
3.1. Intended Use
3.2. Improper Use

4. SAFETY DEVICES
4.1. Description of Safety Devices Access™ Van

5. STICKERS
5.1. Description of Labels & Stickers

6. LOGISTICS
6.1. Receipt and Inspection
6.2. Storing the Lift
6.3. Handling

7. INSTALLATION
7.1. Risk Assessment
7.2. General Installation- Box Section Chassis
7.3. General Installation- Open Section Chassis
7.4. Power Pack Mounting Options
7.5. Checking the Power Pack Oil Level
7.6. Hydraulic and Electrical Fittings
7.7. Floor Height Adjustment
7.8. Bridge Plate Adjustment
7.9. Weight Test- Dynamic
7.10. Weight Test- Overload, Drift & Static
7.11. Installation Checklist
7.12. Torque Settings

8. OPERATION
8.1. Standard Operation procedure
8.2. Manual Override

9. CLEANING
9.1. Cleaning Instructions

10. SERVICE AND MAINTENANCE
10.1. UK Service & Warranty
10.2. Loler
10.3. Daily Inspections
10.4. Monthly Inspections
10.5. Six Monthly inspections
10.6. Lubrication
10.7. 31 Point Check

11. DISPOSAL
11.1. Safe Disposal

12. TROUBLE SHOOTING
12.1. Trouble Shooting

13. DIAGRAMS
13.1. Wiring Diagram- Power Pack
13.2. Wiring Diagram- Lift
13.3. Hydraulic Diagram

14. SPARE PARTS
14.1. Contents List of Spare Parts Access™ Van
14.2. Spare parts request form Access™ Van

15. NOTES

1 General

1.1 Manufacture

Passenger Lift Services Ltd
Unit 2 Summit Crescent Trading Estate
Smethwick,
West Midlands
United Kingdom
Tel: +44(0) 0121 552 0660

1.2 Manufacture

The lift device is manufactured in compliance with the relevant EC directives applicable on the date of entering the market. Considered a “medical device” pursuant to article 2, point 1), letter a), first paragraph of directive 2007/47/EC, the device carries a specific identification plate which, in addition to the specific technical data also includes the CE marking, guarantee of the compliance of the device to the directives/ standards referred to the enclosed Declaration of Conformity.

The plate, a facsimile of which is shown here, is stamped with the data indicating the specific model and unit.

NOTE: The Lift Serial number will be required for <u>ALL</u> correspondence with factory

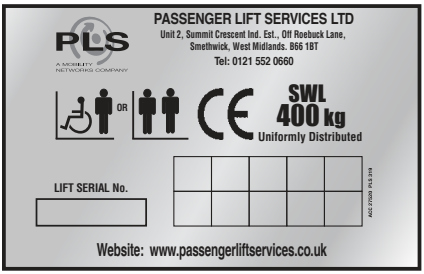

CUSTOMER NAME:	
INSTALLER NAME:	
DATE OF INSTALLATION:	
SERIAL NUMBER:	

IT IS PROHIBITED TO REMOVE OR TAMPER WITH THE IDENTIFICATION PLATE

1.3 Using the Manual

This manual aims to provide users and operators with all the information they require to ensure that they are able both to use the lift appropriately and are able to manage it as autonomously and safely as possible.

Before performing any operations on the lift, users and operators must carefully read the instructions given in this publication.

In the event of doubt over the correct interpretation of the instructions, contact the PLS technical department to obtain the required clarifications.

This manual is an integral part of the lift, it must be kept safely by the purchaser and made available for use by the operators.

The contents of this manual comply with the Directive 2007/47/EC and were drafted following the guidelines given in UNI 10893:2000. They also comply with the requirements of UNI EN ISO 10535:2007 and BS EN 1789:2007 and A2:2014

Data and drawings are indicative only; with a view to the continuous development and updating of its products, the manufacturer may modify the contents without notice.

It is prohibited to disclose, edit or use this manual for any other purposes.

This symbol indicates IMPORTANT Information used by the Manufacture and the User

This symbol indicates areas that need routine maintenance

This symbol indicates Operators areas of responsibility

This symbol indicates IMPORTANT areas for the Safe operation of the Lift

This symbol indicates that a potentially hazardous situation could occur

This symbol indicates improper use of the lift

1.4 Operators Responsibility

The operator is individually responsible for the safe use and maintenance of the lift.

They are also responsible for the lift users and their own personal safety and in the event of an accident they will be prosecuted to the full extent of the law if they are deemed negligent.

Legal action will also be taken if any unauthorised modifications are made to the lift without direct prior written authority by a PLS director.

The lift owner is the person who purchases the product, uses or oversees the use of the lift, this person is legally responsible for the lift's safe use.

The accompanying person, also known as the operator is responsible for the safe operation of the lift.

The operator must be full trained in all the operation aspects of the lift such as the transportation of people with motor deficiencies or disabilities. The operator must exhibit the following characteristics/ attributes for them to safely operate the lift:

PHYSICAL – Possess the required physical qualities/ characteristics sufficiently to ensure safe operation of lift in a safe and controlled manner. Examples include:

- Good hearing & sight
- Physically capable of performing all operational functions of lift
- Not impaired by the consumption of legal and/or illegal substances (such as alcohol and/ or drugs)

MENTAL - Possess the required mental qualities / characteristics sufficiently to ensure safe operation of lift in a safe and controlled manner. Examples include:

- Understanding & application of the safety rules and procedures while operating the lift.
- Be constantly aware and pro-active to ensure the safety of operator, consumer and nearby people.
- Have the knowledge/ skills to perform as an assistant and/ or operator in all aspects of lift operation. E.g. the safe transportation, loading and unloading of disabled and other passengers.

EMOTIONAL - Possess the required emotional qualities/ characteristics sufficiently to ensure safe operation of lift in a safe and controlled manner. Examples include:

- Work in a calm & safe manner while under stress so to prevent stress from impairing good judgement.
- To be emotionally stable during normal or abnormal situations

TRAINING – Possess the required training qualities sufficiently to ensure safe operation of lift in a safe and controlled manner. Examples include:

- Completed operational training supervised by an experienced operator in PLS lifts in an environment which is safe and controlled. Such supervised training should allow the trainee to gain working experience in all operation aspects of the lift.

The lift owner is responsible for distributing and ensuring that a copy of this manual is read and fully understood by all potential lift operators before operating the lift.

No operator will use the lift if they believe it is unsafe and doing so could injury themselves or others, they MUST report their concerns directly to their manager or PLS

Safety Instructions for 'Scooters' and Large Powered Wheelchairs

Before operating tail lift:

Fully familiarize yourself with lift controls, relevant safety procedures and possible hazards, signified by warning labels or highlighted in your 'Operators Risk Assessment'.

Tail lift safety:

- Only an authorised (fully trained) operator must control the lift.
- Secure vehicle doors fully open, well clear of the lift platform.
- Keep within the stated maximum safe working load (SWL).
- Keep people away from the operating area (inside and outside of vehicle).
- Ensure that the platform is always level (horizontal, not more than 5º).
- NEVER leave the lift unattended at ground level if passengers are on board.
- When lift is not in use the controls should be deactivated.
- Ensure that the lift is correctly stowed after loading.

Operators ensure that:

- Lift will lower to firm, level ground.
- Scooter or powered wheelchair is not larger than lift platform in any direction.
- Tail lift is in a FULLY operational condition. Report any defects.
- Lift bridging-plate lands flat onto vehicle floor.
- Roll-off ramp is set vertically (approx. 80º), and fully operational.
- Accompany the passenger on the lift if possible, but do not overload the lift.
- You have a clear view of the lift platform before the scooter moves onto it.
- NEVER leave passengers unattended at any time.
- The passenger should not be required to operate ANY controls.

Loading & Unloading procedure:

- Explain to passenger the sequence of movements that will occur.
- Where possible passenger should dismount scooter and board vehicle separately.
- Ensure that the lift platform and area around the lift are free from obstruction.
- Ensure that the lift platform is in the correct position before moving onto it.
- Scooter should be pushed onto the lift platform, NOT DRIVEN.
- Ensure that persons or equipment do not overhang the platform.
- Scooter breaks are applied BEFORE lift begins motion (or wheels blocked).
- All power to scooter is turned OFF.
- Operate lift platform to vehicle floor.
- Scooter is pushed off the lift platform, NOT DRIVEN.
- The scooter should be clamped to the vehicle floor using the correct equipment.
- The passenger utilises the static vehicle seats and seatbelts.

Please note: The transportation of scooters and large powered wheelchairs may require a 'NON STANDARD' tail lift size or specification. Where possible PLS can provide longer, wider platforms, higher roll-off ramps to help combat the increased hazards related to larger passenger vehicle transportation.

2.1 Main Components Access™ Van

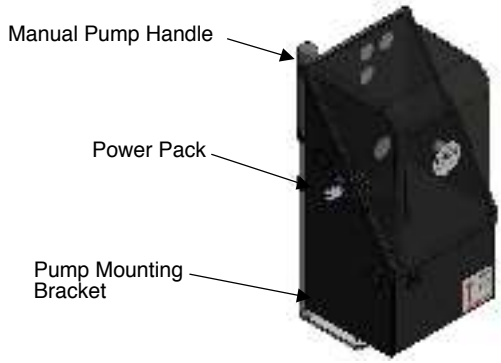

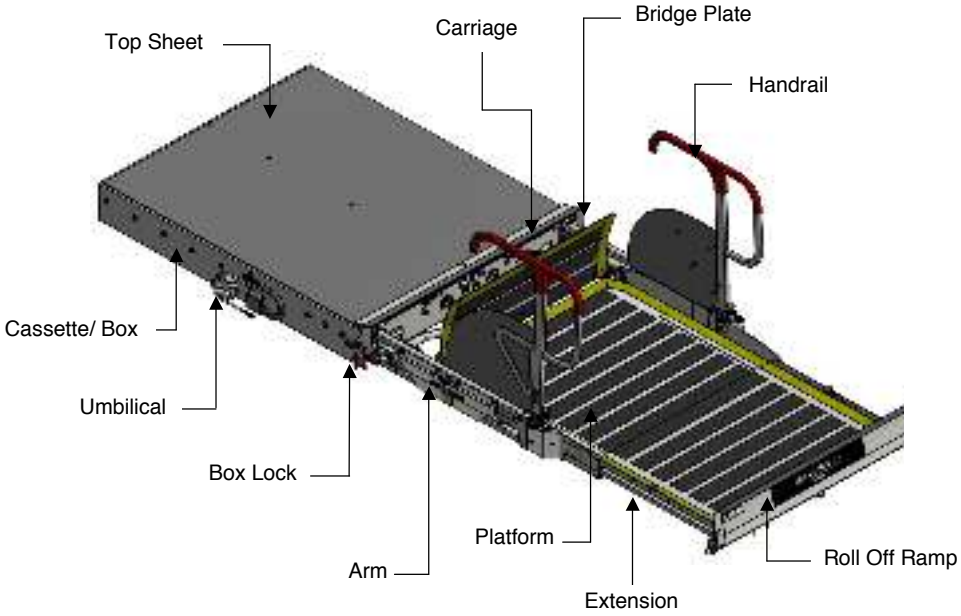

2.2 Dimensions Access™ Van

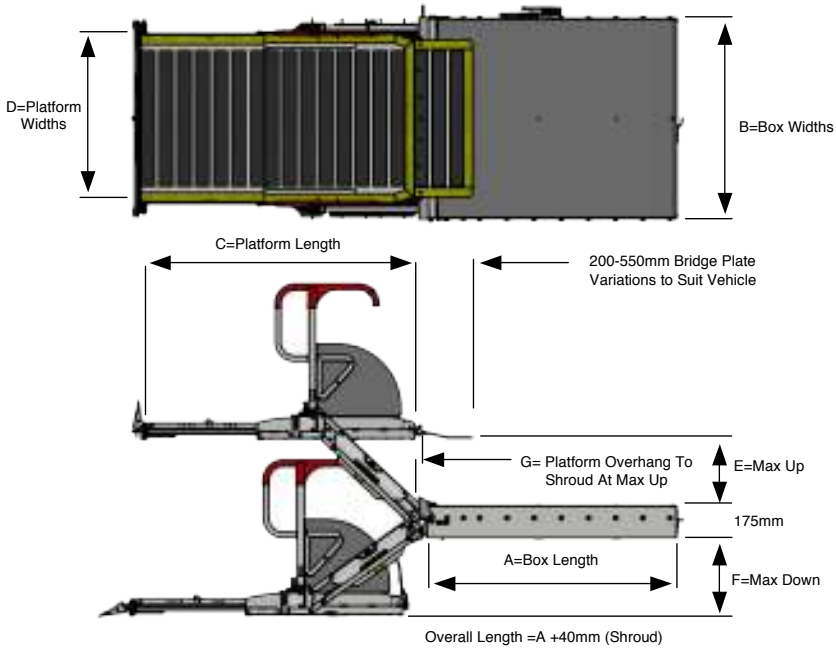

	ACC-1150	ACC-1200	ACC-1280	ACC-1300	ACC-1380
A	1150mm	1200mm	1280mm	1300mm	1380mm
B	1000mm	1000mm	1000mm	1000mm	1000mm
	1100mm	1100mm	1100mm	1100mm	1100mm
C	1390mm	1410mm	1410mm	1510mm	1510mm
D	825mm	825mm	825mm	825mm	825mm
	925mm	925mm	925mm	925mm	925mm
E	360mm	425mm	470mm	425mm	470mm
F	370mm	400mm	470mm	400mm	470mm
G	95mm	100mm	70mm	100mm	70mm

2.3 Technical Data Access™ Van

The Lift is designed To Transport:

One person in a wheelchair with or without an attendant, with a size not larger than the width/ length of platform space available, or weight over the stated 'SWL' capacity

Or:

Two walking passengers. The operator should not attempt to transport more than two people at a time of increased risk of passenger discomfort. The passengers also may require extra space for mobility devices such as sticks and frames

	ACC-1150	ACC-1200	ACC-1280	ACC-1300	ACC-1380
SWL (Kg)	400	400	400	400	400
Voltage (DC)	12V	12V	12V	12V	12V
Pressure (Bar)	130	140	160	140	160
Auxiliary Hand Pump	Yes	Yes	Yes	Yes	Yes
Lift Control	2 Button Handset	2 Button Handset	2 Button Handset	2 Button Handset	2 Button Handset

Note: Lift weight not including Power-pack & Installation Kit

3 Product Use

3.1 Intended Use

The lift is designed for installation on the loading floor of a vehicle designed for transportation of the disabled in wheelchairs, within the limits of the performances and capacities indicated in the technical characteristics.

The lift must only be used by an authorised and trained operator, known as the accompanying person, who possesses the knowledge and physical requirements to safely perform operations with disabled persons.

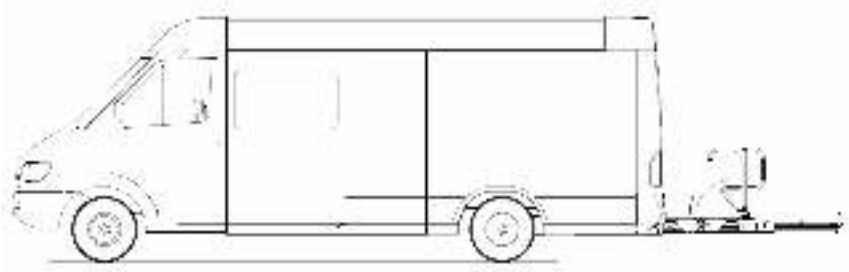

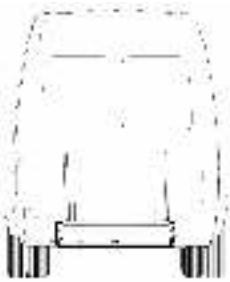

Anything that is not specifically referred to in chapter 3.1 is considered **IMPROPER USE**.

THE MANUFACTURER DECLINES ALL RESPONSIBILITY FOR DAMAGE CAUSED TO PERSONS OR PROPERTY OR TO THE LIFT ITSELF DUE TO ANY USE OTHER THAN THAT DESCRIBED IN THIS MANUAL.

3.2 Improper Use

Anything that is not specifically referred to in chapter 3.1 is considered **IMPROPER USE**.

IT IS FORBIDDEN to climb onto the lift or any of its parts and go up or down while standing.

It is advisable to always attempt to use the lift on flat/ level ground

No angle of more than 5° from level (in any direction) should be attempted

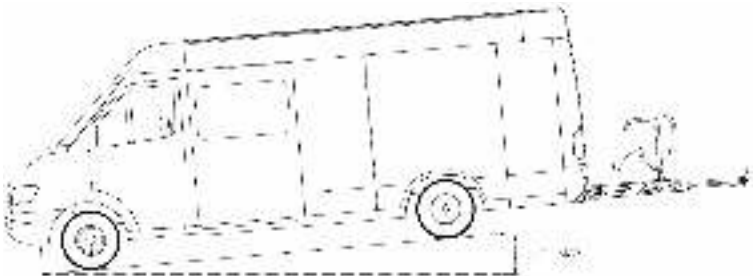

Anything that is not specifically referred to in chapter 3.1 is considered **IMPROPER USE**.

THE MANUFACTURER DECLINES ALL RESPONSIBILITY FOR DAMAGE CAUSED TO PERSONS OR PROPERTY OR TO THE LIFT ITSELF DUE TO ANY USE OTHER THAN THAT DESCRIBED IN THIS MANUAL.

4 Safety Devices

4.1 Description of Safety Devices Access™ Van

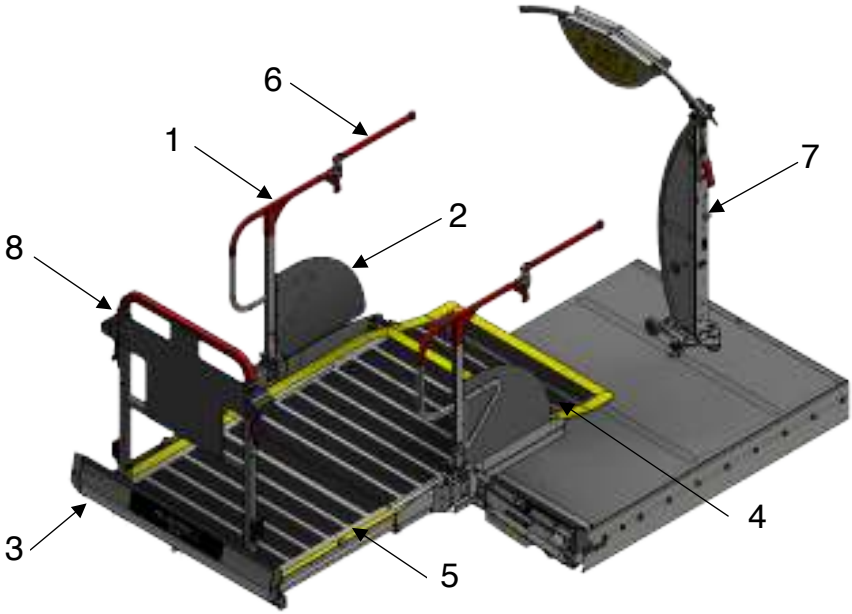

1	Handrail	Standard
2	Handrail Guard	Standard
3	Roll Off Ramp	Standard
4	Bridge Plate	Standard
5	Anti-Slip Surface Cleating	Standard
6	Handrail Extension	Optional
7	Door Safe	Optional
8	Stop Safe	Optional

IT IS FORBIDDEN TO DISABLE, REMOVE OR TAMPER WITH THE EXISTING SAFETY SYSTEMS.

5.1 Description of Labels & Sticker

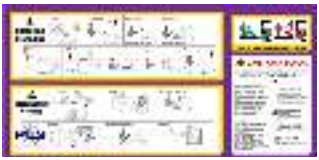

ACC25130-DB
Access Operation Instructions Board

ACC 26469

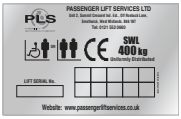

PLS 321

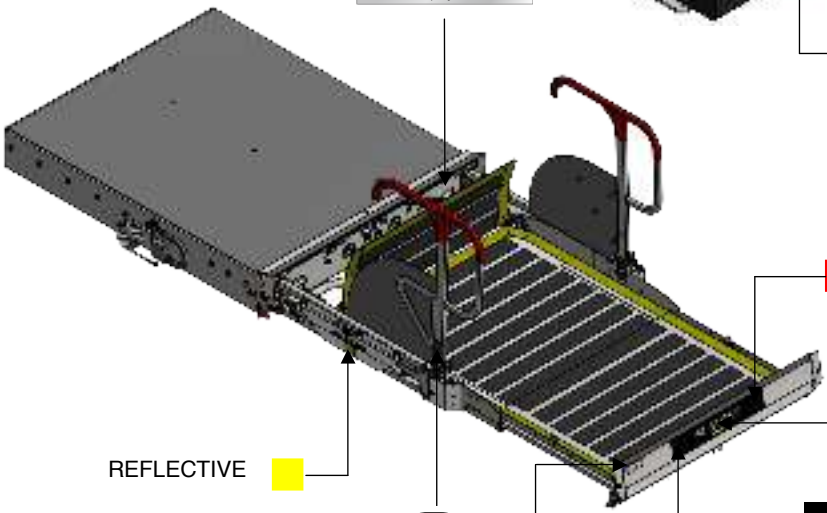

REFLECTIVE

REFLECTIVE

REFLECTIVE

6 Logistics

6.1 Receipt and Inspection

Upon delivery of the lift, you need to perform the following inspections:

- Ensure the product delivered corresponds to the relevant documentation e.g. the order specification and the transport document.
- Examine packaging to ensure it is undamaged and all parts are intact during transportation.
- With great care, examine all devices to ensure they haven't been damaged during transportation and all parts haven't been tampered or removed.
- Ensure all documentation required for installation has been supplied.

IF THE DELIVERED DEVICE DOES NOT COMPLY WITH THESE REQUIREMENTS, NOTIFY THE MANUFACTURER IMMEDIATELY.

6.2 Storing The Lift

If the lift is not used, proceed as follows:

- Transport lift to an appropriate storage area, free from atmospheric agents / elements.
- Ensure all electrical / electronic devices are insulated from external environment so to prevent humidity damaging those components.
- Storage area selected **MUST** ensure temperature variation is between 5°C to 50°C fresh hold.
- Ensure all sliding parts (guides, cylinders ...) are adequately protected from dust, rust and water damage.

Note: If a lift is to be dry stored for more than 12 months then all cylinder seals MUST be checked before operation

STORAGE OF THE LIFT IN CONDITIONS THAT DO NOT COMPLY WITH THE ABOVE DESCRIPTION SHALL NULLIFY THE WARRANTY FOR ANY PARTS TO BE REPLACED.

6.3 Handling

All lifting and short workshop distance transportation of packages lifts must be carried out using a forklift truck.

Safe lifting can only be achieved when using suitably rated load capacity equipment (Please refer to Technical Data Table for indicated lift weight)

HANDLING STAFF MUST WEAR: SAFETY SHOES WITH STEEL TOE CAP AND NON-SLIP SOLES.

MAKE SURE THAT NO UNAUTHORISED PERSONS ARE STANDING WITHIN THE RADIUS OF ACTION OF THE LIFTING/HANDLING MEANS (FORK LIFT TRUCK, TRANSPALLET, ETC.) DURING THE LIFTING, TRANSPORT AND HANDLING OPERATIONS.

Procedures for packaging removal are explained below:

- Using a Stanley Knife with a maximum blade length of 10mm, cut along the 4 sides of the base of the packaging, remove tape and ensure waste cardboard is recycled
- For wooden crates, remove nails from top panel and those present on the side walls.

STAFF REMOVING THE PACKAGING MUST WEAR:

SAFETY SHOES WITH STEEL TOE CAP AND NON-SLIP SOLES AND GLOVES.

7 Installation

7.1 General Installation- Risk Assessement

Location: Passenger Lift Services Ltd — Rev No:

Operation/Activity: Lift Operation

List below the operations, in your opinion, which involve a significant hazard, risk of injury?	Severity 1 2 3 4 5	Likelihood 1 2 3 4 5	Risk Rating = S x L
Stability of lift during operation	2	1	2
Entrapment from moving parts	2	1	2
Slips, trips and falls	3	1	3
Operating environment	3	2	6
Manual operation of lift	2	1	2
Contact with hazardous substances	2	1	2
Fire	1	1	1

List persons at risk:	Operators Passengers	No injury just minor damage to plant, equipment or structure Minor injury – small cut or bruise – first aid treatment Serious – medical treatment required – doctor or small injury clinic Major – attendance at hospital accident and emergency department Fatalities	Rare - may occur only in exceptional circumstances. (0-20% chance) Unlikely - conceivable (21-40% chance) Moderate - could occur at sometime. (41-60% chance) Likely - not surprised could occur several times. (61-80% chance) Certain - to be expected, will occur repeatedly. (81-100% chance)	**18** Overall risk rating

Risk rating has been defined taking into account the following control measures

Control measures include (engineering quality control, specialist equipment information / instruction, Customer responsibilities maintained.

Action Plan / Controls:-

All lifts are supplied with safety instructions and safe operating procedures with visual instruction for the automatic and manual operation of lifts.

Safety instruction is also generated and supplied for the use of lifts by scooters and large powered wheelchairs.

Supply and fitted lifts have a weight test certificate and an installation and examination report completed by a competent engineer complying to; Lifting Operations and Lifting Equipment Regulations 1998.

Additional controls are to be implemented and maintained by the end user, with six monthly inspections carried out on all lifting equipment conforming to; Lifting Operations and Lifting Equipment Regulations 1998.

Has the overall risk rating been reduced to Low?		Controls are deemed adequate- proceed with the operation/activity	1-7
Has the overall risk rating been reduced to Medium?	X	Consider additional controls, strict monitoring of controls required -proceed with caution	8-20
Has the overall risk rating remained High?		Operation / activity is NOT to be undertaken until additional controls have been implemented - contact safety officer	21-30

Can the risk be reduced to low by introducing additional preventative and/or protective measures? No

See Risk Assessment Action Plan for additional precautions / controls to be implemented.

Assessment carried out by: Position: Date:

REMEMBER: REVIEW THE ASSESMENT IF THE CIRCUMSTANCES CHANGE SIGNIFICANTLY

7.2 General Installation- Box Section Chassis

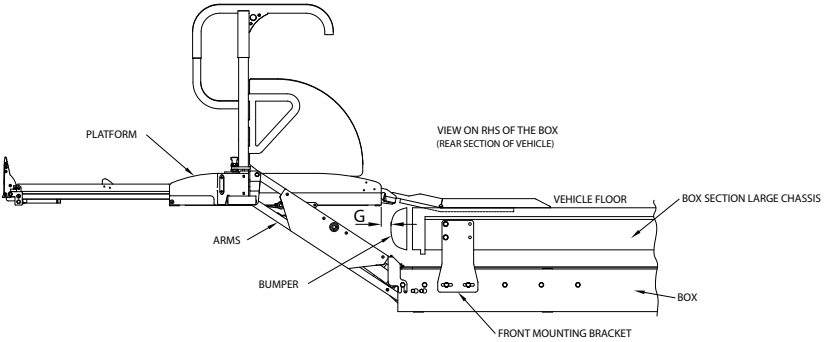

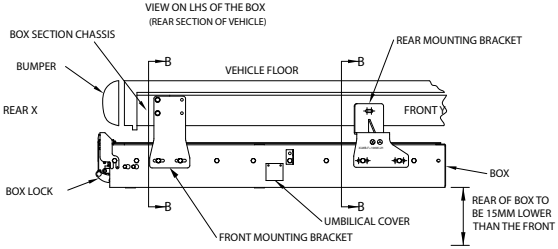

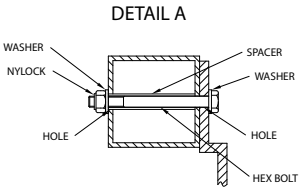

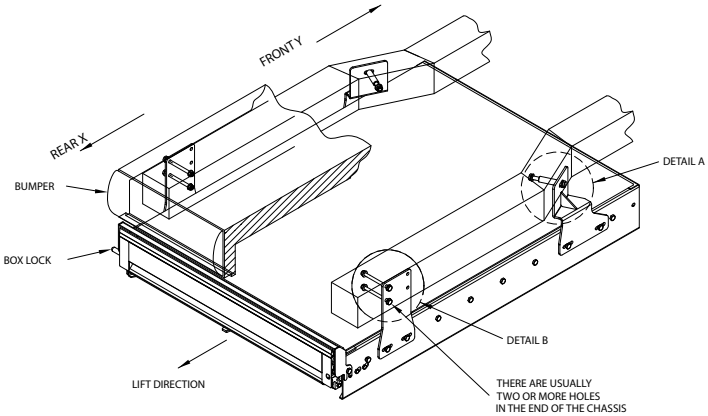

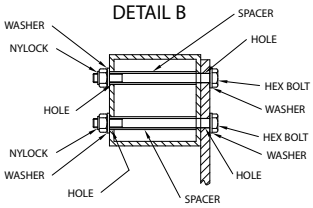

7.3 General Installation- Open Section Chassis

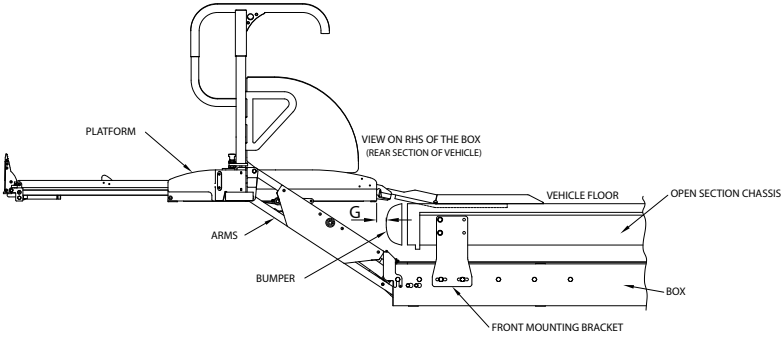

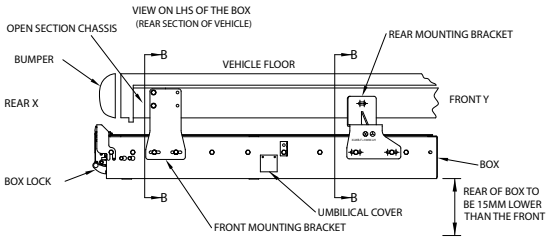

DETAIL A

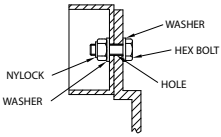

DETAIL B

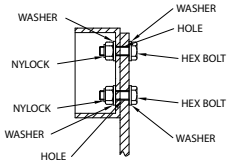

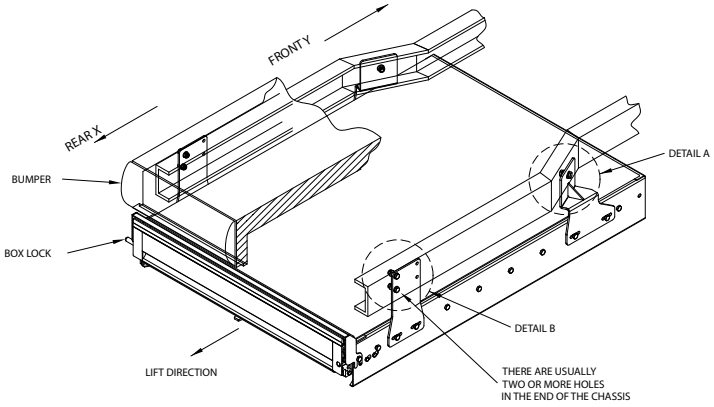

7.4 Power Pack Mounting Options

Vertical Mounting

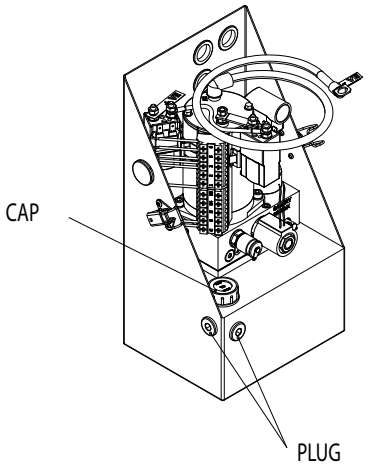

Mounting

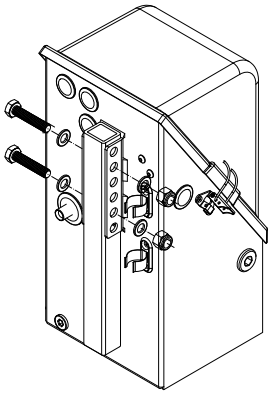

Horizontal Mounting
(On Back)

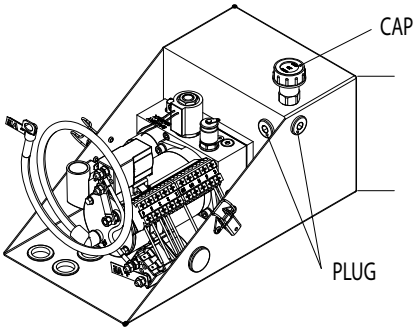

Horizontal Mounting
(On Side)

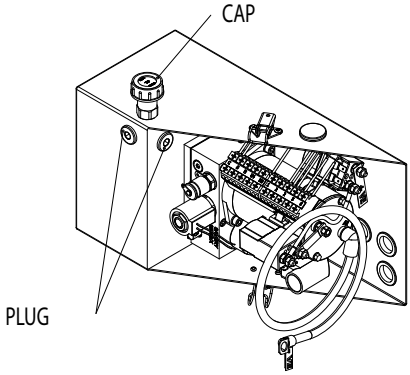

mounting brackets will vary contact pls

7.5 Checking the Power Pack Oil Level

Ensure Pump is clean during service life and not enclosed in wet or dry road debris.
Externally mounted Pumps should not be submerged in water!
Mud Guards or Splash protection is recommended for externally mounted pumps where possible.
Oil level & condition must be visually checked during every service interval for contamination, every three years the oil tank MUST be completely drained, thoroughly cleaned and then refilled with filtered PLS Blue oil.

Before checking the Oil Level, ensure the vehicle is securely parked on flat level ground; operate the lift so that the lift platform sits completely on the ground.

Metal tank with a dip stick:-
Ensure any loose dirt is removed from around The tank filler cap with a clean dry cloth.
Remove Oil filler cap and wipe any residual oil From the dip stick using a clean dry cloth.
Re-fit the dip stick fully into the Oil filler, remove and then check to see where the oil is indicated on the dip stick.
If the oil is on or below the min mark then top up slowly with filtered PLS Blue oil only, repeat checking procedure as above until the oil is mid way between min/ max levels.

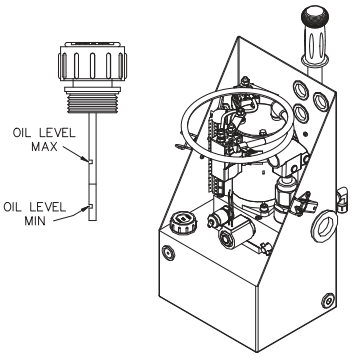

Compact Pump

Plastic tank with NO dip stick:-
Ensure any loose dirt is removed from around the tank filler cap and oil level indicator marks with a clean dry cloth.
Visually check the oil level within the translucent oil tank, if the oil is on or below the min mark then top up slowly with filtered PLS Blue oil only, repeat checking procedure as above until the oil is mid way between min/ max levels.

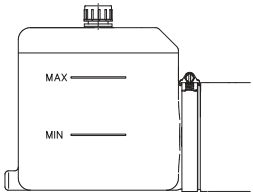

Plastic Tank

7.6 Hydraulic and Electrical Fittings

Hydraulics Fitting

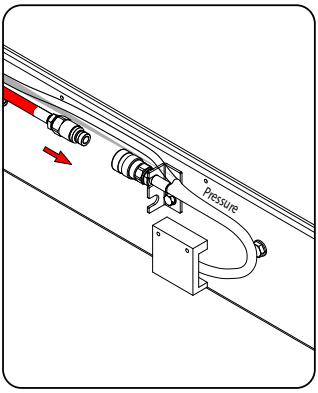

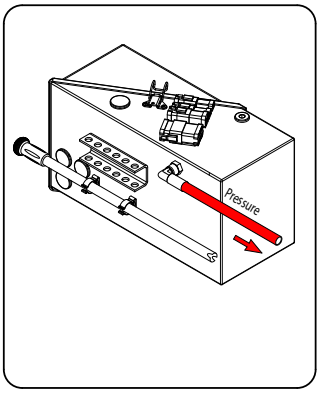

Electrics Fitting

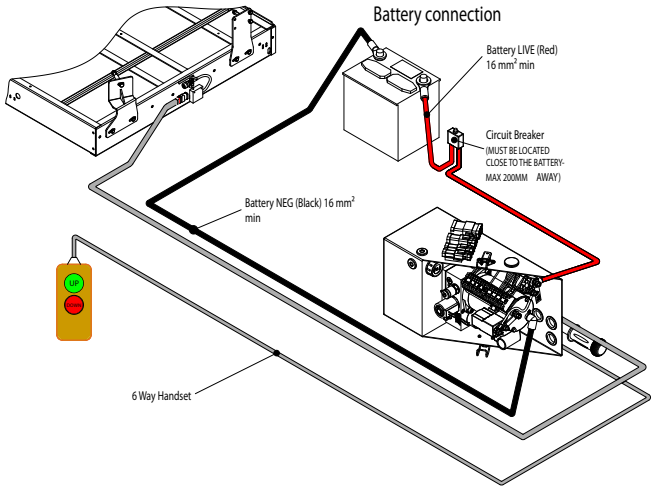

7.7 Floor Height Adjustment

1. Loosen Lock Nut

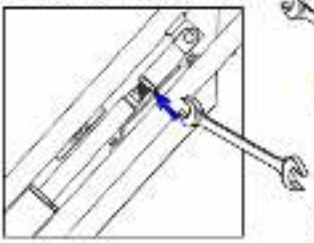

2. Adjust Floor Height

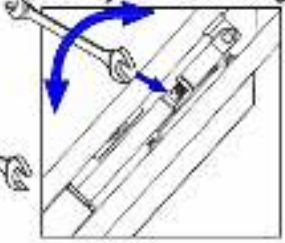

Anti Clockwise = UP

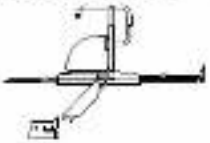

Clockwise = DOWN

3. Check Thread Length

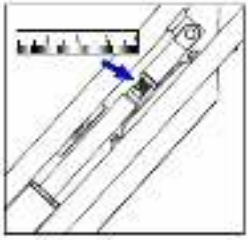

Thread Length 5mm To 20 mm ✓

Thread Length Over 20 mm ✗

4. Lock

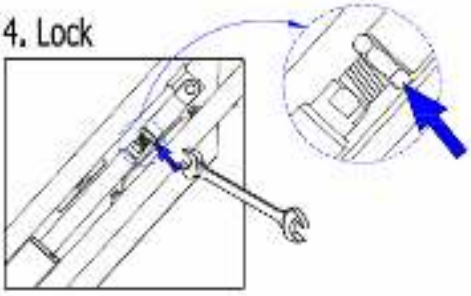

5. Check Floor Height

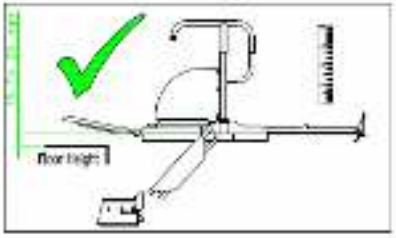

6. Check Cylinder Balance (kick)

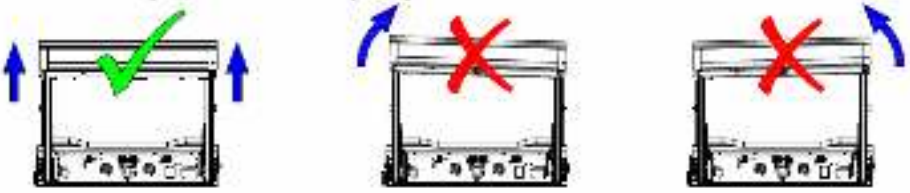

7.8 Bridge Plate Adjustment

Access is gained from top of Platform

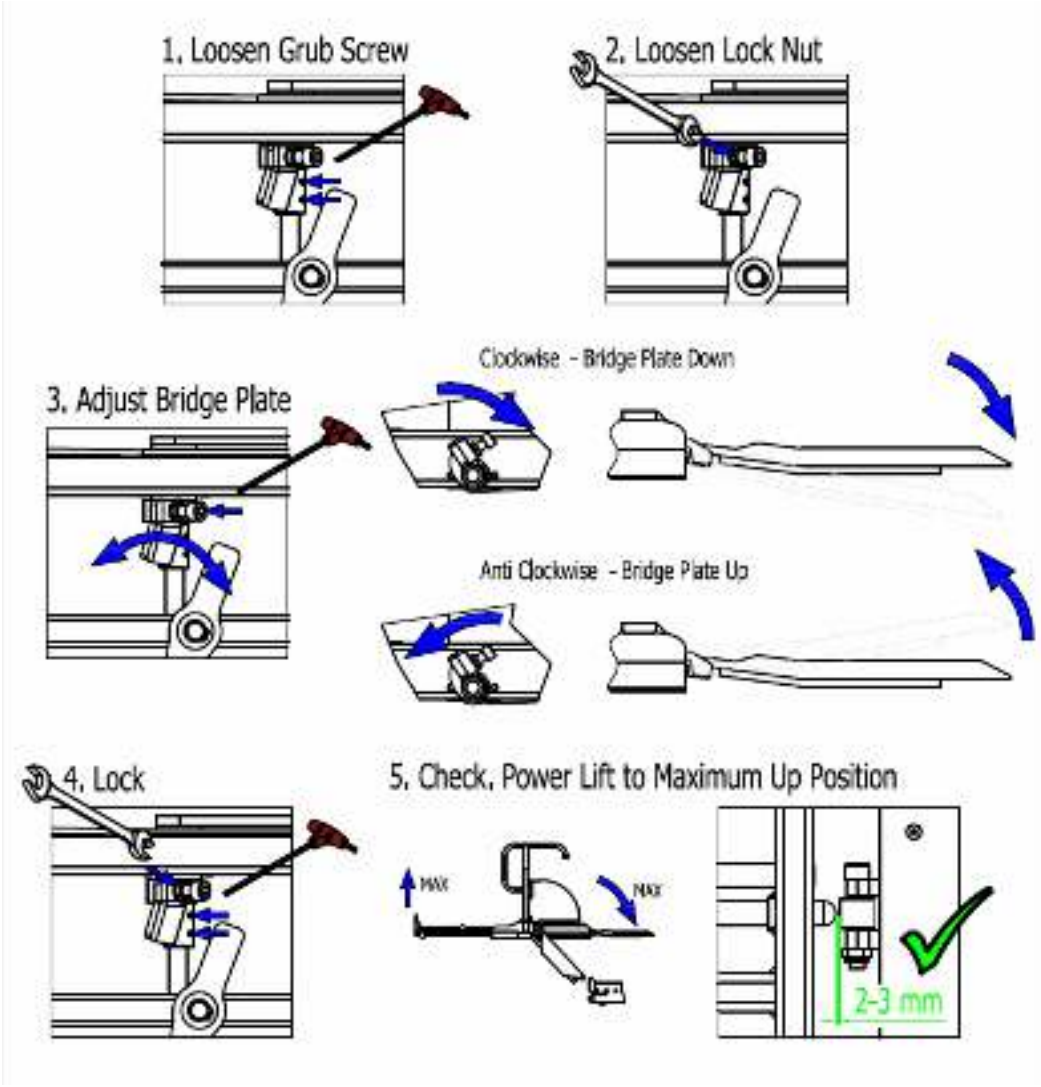

7.9 Weight Test

Dynamic

1 Reduce Power Pack Pressure

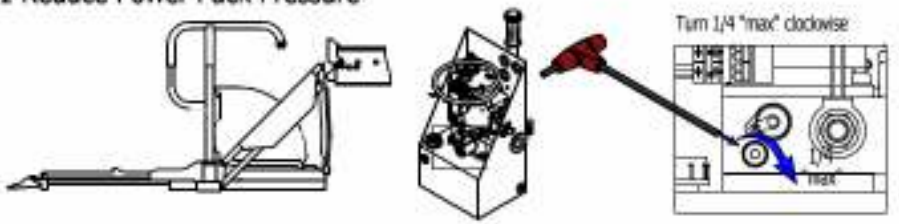

2 Power Up Lift, Increase Pressure Gradually To Lift

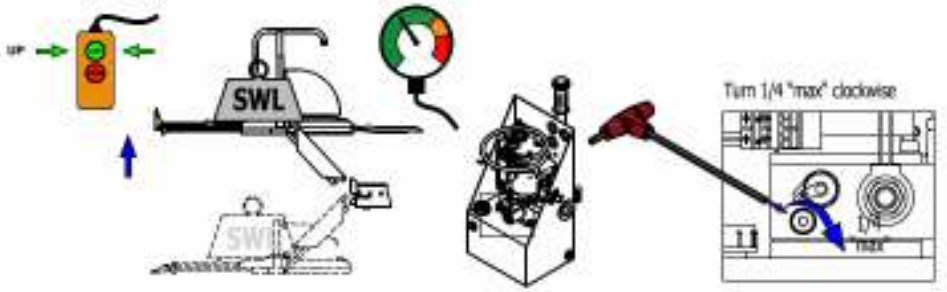

3 Power Down Lift

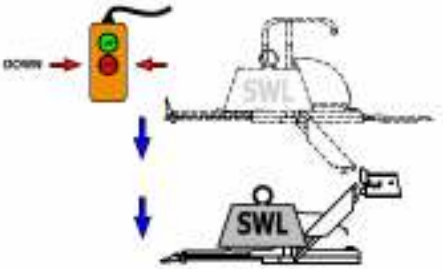

Check Manual Pump

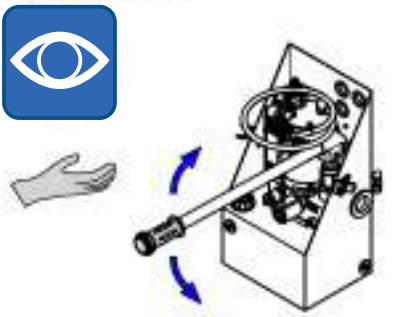

7.10 Weight Test

Overload

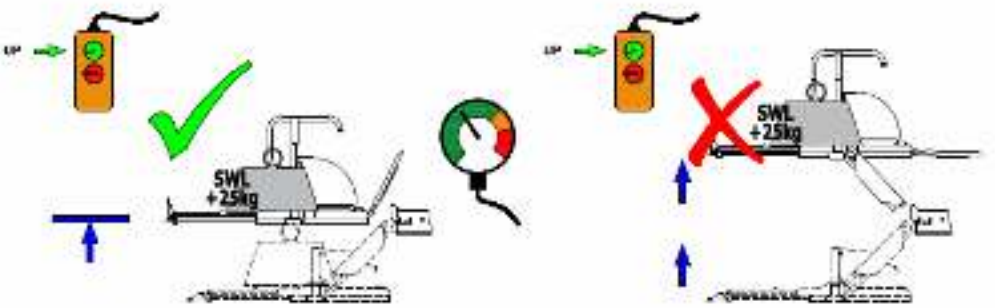

Drift

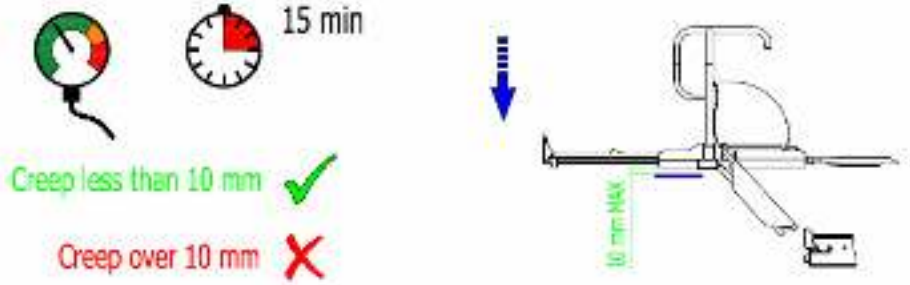

Static

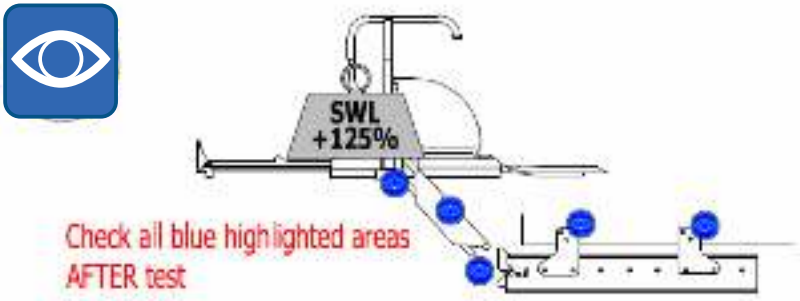

7.11 Installation Check List

Installation Checklist		
Engineer Name: **Date:**		
Customer Details: **Address Contact:** **Tel Number:** **Lift Serial Number:**		
No	**Item**	**Checked**
1	Check lift to order supplied by PLS	
2	Dispose of any excess parts / materials appropriately	
3	Lift to be collected in a timely manner	
4	If lifts cannot be collected and delivered for any reason, PLS will dispatch lift to the customer's premises (UK ONLY)	
5	Ensure enough time is allowed to install the lift in one full day	
6	To sign in / register with relevant manager at Coach Builders, and abide by the Site's H & S Policy.	
7	Dependent on the Customer's H & S Policy, the Engineer maybe required to provide a working on site risk assessment	
8	Deliver the lift (s), plus tooling and test weights	
9	To co-ordinate lift, tooling and weights to the installation bay	
10	For the given vehicle, Engineer to check correct paperwork	
11	Check vehicle is (Standard), anything other than (Standard) should be reported immediately. This includes spare wheels, fuel tank, modification of suspension, air conditioning unit, exhaust and all parts of exhaust	
12	Installation should commence in correlation to guidelines set out by PLS	
13	Hand control cable through door – Vehicle cable bush	
14	Door plug (Nutrik) 20mmø hole required.	
15	Door switch 12mmø hole. One required if no cab switch?	
16	Rubber boot on 70 amp isolator.	
17	Drill chassis 20mmø, and used tube spacers.	
18	Shroud nitto plastic taken off.	
19	Tape on box back holding top sheet on	
20	Once lift is installed and correctly adjusted, Loler inspection certificate to be completed. A full weight test to be conducted in accordance with the weight certificate. **(BS:EN 1756-2-2004 15 minute creep test)**	
21	First weight test to be tested to **125%** stated S.W.L load (**I.e.** 400kgs = 500kgs full test). Photographs are to be taken of the weight applied	
22	After load test, pump should be reset to (400kgs < 425kgs max)	

23	Once test weights are removed, to visually inspect lift / brackets / all fastenings, if necessary check with tools **(Calibrated torque wrench)**	
24	Cosmetics of the installation are standardised by the following:	
	○ Operation board to be screwed in with appropriate fastenings	
	○ Handset located in standard position	
	○ Handset cable correctly wired through door and door hinge	
	○ Door or cab switch correctly installed and adjusted	
	○ Hydraulic pump topped up to correct level of fluid	
	○ All cabling correctly tightened and exposed ends rubber booted	
	○ Conduit in all cables **(70 amp)**	
	○ Isolator relay routed on bracket	
	○ Power pack is fused correctly as supplied by the factory, any modifications required or witnessed should be fully documented and reported to all parties concerned.	
	○ Hand pump handle should be correctly clipped to power pack or customer's preferred location	
	○ Pump c/s link wire taken out	
25	Lift to be fully cleaned down and checked in accordance with new equipment automotive supply. **(Air blow and silicone, lubricate)**	
26	Remaining photographs to be taken of lift fully up / lift fully down / lift cassette box from under vehicle, to include weight test photo. Photos to be emailed to Head Office	
27	Relevant manager to be contacted to inspect installation and sign off relevant paperwork	
28	Work area to be cleaned to a satisfactory level	
29	Tools, weights and pallet to be removed back to Engineer's vehicle	
30	Engineer to sign out accordingly with the site policy	

7.12 Torque Settings in Nm

Thread Size	Tightening Torque Nm Property Class		
HTS	**8.8**	**10.9**	**12.9**
M4	2.9	4.1	4.95
M5	5.75	8.1	9.7
M6	9.9	14.0	16.5
M8	24.0	34.0	40.0
M10	48.0	67.0	81.0
M12	83.0	117.0	140.0
M14	132.0	185.0	220.0
M16	200.0	285.0	340.0

Thread Size	Tightening Torque Nm Property Class		
HTS Hex Flange	**8.8**	**10.9**	**12.9**
M6	9.0	14.7	16.8
M8	20.0	35.6	41.0
M10	40.0	70.6	81.0

Thread Size	Tightening Torque Nm Property Class	
Stainless Steel	**A2-70**	**A4-80**
M4	2.6	3.5
M5	5.1	6.9
M6	8.8	11.8
M8	21.4	28.7
M10	44.0	58.0
M12	74.0	100.0
M14	119.0	159.0
M16	183.0	245.0

Thread Size	Tightening Torque Nm
Hydraulic Fitting BSP	
1/8	17.0
1/4	34.0
3/8	47.0

8.1 Standard Operating Procedure

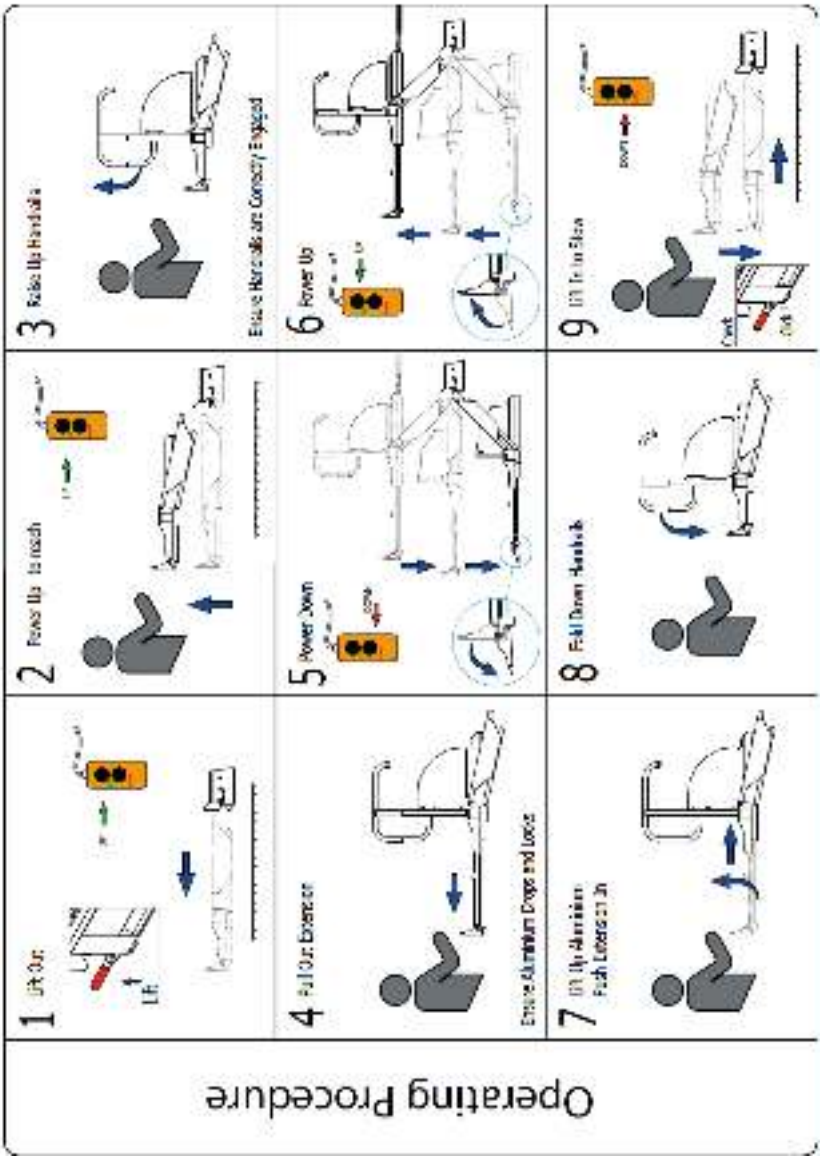

8.2 Manual Override Procedure

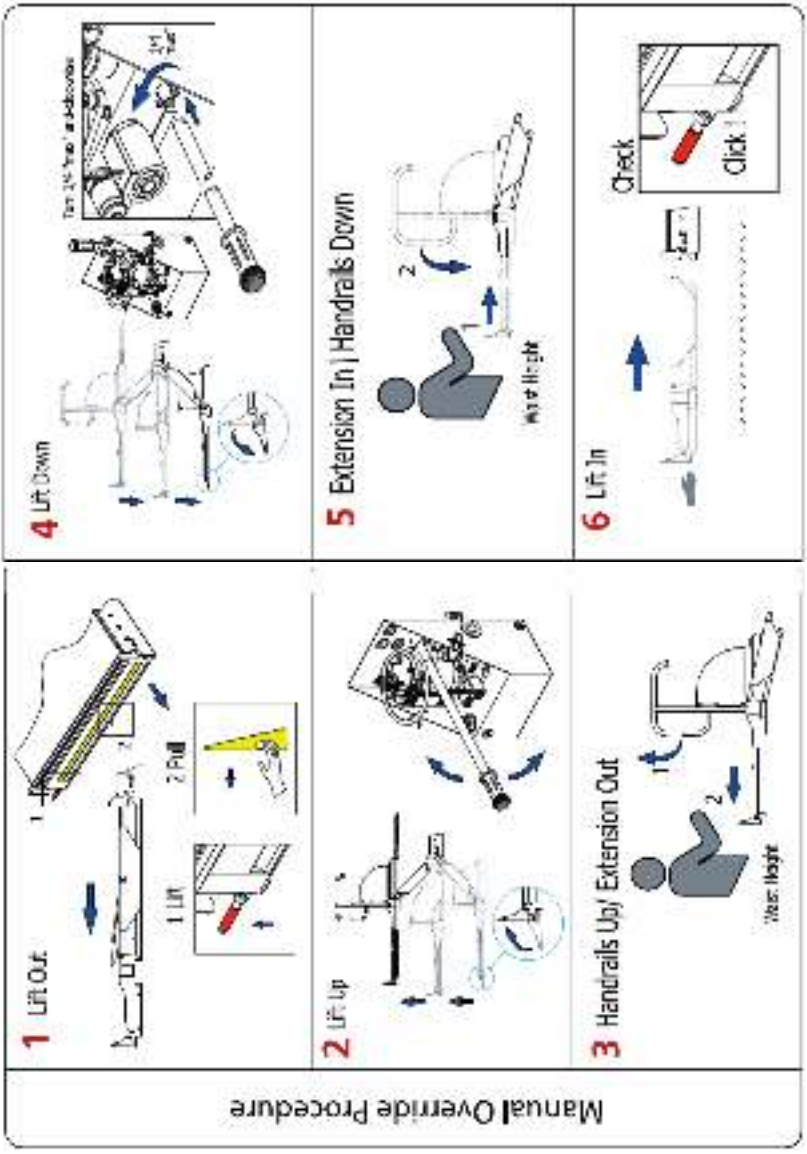

9.1 Cleaning Instructions

Great care needs to be taken during the cleaning process, all cleaning is to be carried out by hand using a gentle cloth or sponge soaked in non-aggressive detergent and then rinsed with a cloth dampened with water. Ensure all moving parts are re-lubricated where necessary.

DO NOT USE AGGRESSIVE DETERGENTS.

DO NOT USE WATER JETS OR HOT WATER JET CLEANERS.

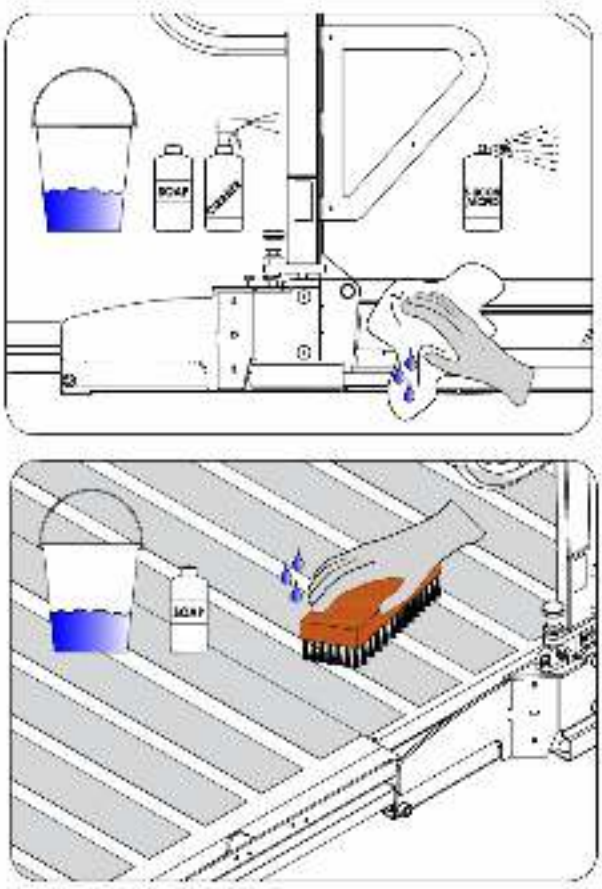

Check and re-lubricate parts as described in section 10.6

10.1 Warranty

Warranty Cover & Period

The PLS Warranty covers parts and labour, and is effective for 36 months from the date of initial commission by PLS or a certified authorised engineer.

If the date of initial commission is in excess of 90 days from date of despatch, the warranty will start from the date of despatch.

Procedure:

1. To qualify for this warranty, it is necessary to register the Lift and Vehicle details on line www.passengerliftservices.co.uk or via post within 45 days of the initial **LOLER** inspection.
2. An operator requiring attention to a unit will contact PLS
3. directly and quote the **Lift serial number**.
4. PLS will then instruct a company engineer or an authorised approved Service Agent by issuing an official order number to affect the repair.

NB: ANY WORK CARRIED OUT WITHOUT AUTHORISATION WILL NOT BE REIMBURSED.

Conditions:

Warranty does not extend to lifts that have not been regularly serviced by a PLS engineer, or factory trained and authorised engineer. This includes the 6 monthly LOLER inspection and separate weight test, which must be current at the date of the Warranty Claim.

All previous LOLER and Weight Test Certificates must have been copied to PLS and run concurrently.

The lift must be made available during the hours of 08.30 and 17.00, Monday to Friday, excluding public holidays.

No delivery costs or travel time will be reimbursed except by prior agreement, as specified on the original Purchase Order.

The initial Warranty period applies to original parts only.

Replacement parts changed under warranty, and new parts purchased, carry 12 months warranty only.

New parts that have been purchased and require a warranty repair will require either a copy of the original Purchase Order or details of the original Purchase Order number to qualify.

The serial number(s) for the component claiming warranty must match the serial number(s) recorded to the lift it was originally fitted to.

If a customer has an invoice unpaid beyond PLS terms and conditions or is in dispute customers lift will not be visited.

Warranty Exclusions:

Hydraulic Power packs that are fitted to the exterior of the vehicle only carry 12 months warranty (if cover is missing warranty void).

Hydraulic Power packs fitted to the interior of the vehicle qualify for the 24 months warranty.

The following are all excluded from warranty:

Consumable parts e.g. Fuses, Bulbs, Electrical Connectors, Bearings, Hydraulic Hoses (with the exception of manufacturing defects). Fastenings which should be checked at the service intervals. Driver misuse Accident damage. Items that are subject to the level of wear & tear which would normally involve replacement during normal service, maintenance and operating conditions.

Handsets carry 12 months warranty only.

No claim will be accepted for:

Replacement vehicle hire or loss of earnings.

The Warranty Agreement does not supersede the Suppliers liability for all components as defined in the Sale of Goods act 1982.

Months 24 to 36 of the Warranty:

The vehicle will be required to be returned to the PLS Factory for 'free of charge' warranty work.

When this is not possible, labour and travel will be charged at the current PLS hourly rate, weather it is a PLS engineer or an agent working on behalf of PLS Ltd that conducts the repair.

If an agent is used, it will be at the discretion of PLS Ltd as to who will affect the repair.

Any parts sent to an agent for warranty work within the 24-36 Month period, will incur the relevant courier costs at commercial rates, and will be at the expense of the customer.

Extended Warranty:

Extended Warranty is available for months 37-60 with a written agreement of PLS Ltd, initiated BEFORE month 37 starts.

This warranty will follow the same basis as the 24-36 month period.

Extended Warranty does not include Power packs, motors, hydraulic cylinders and hoses.

Passenger Lift Services Ltd,
Unit 2, Summit Crescent, Smethwick, West Midlands. B66 1BT
enquiries@pls-access.co.uk • www.passengerliftservices.co.uk
Tel: 01215520660 fax: 01215520200

IMS ISO 9001 certified UKAS
IMS ISO 14001 certified UKAS

10.2 Loler

This lifting equipment is covered by the
"Lifting Operations & Lifting Regulations Act 1998. "LOLER".

It is the lift operating company or duty holders responsibility to ensure that at regular **SIX** monthly intervals this equipment is **INSPECTED, SERVICED & WEIGHT TESTED** by a competent tail lift engineer.

For more information, please contact
PLS Service Department direct line:

0121 559 0466

10.3 Daily Inspections

Lift Inspection checks are required on a DAILY basis by the lift operating company.

The working life of your lift will be greatly prolonged if these steps are adhered to.

This should include the following:

Daily Inspection Check List		Lift no:	
		Vehicle Reg:	
Engineer's Name:		Date:	
Customer Details:			
Address, Contact:			
Tel Number:			**OK**
1	Check oil level visually using the dip stick or against the oil level indicator marks on the oil tank.		
2	Check for oil contamination, usually a white creamy liquid on the underside of the filler cap, or visible water.		
3	Visually check for any leaks or damage.		
4	Check for obvious signs of damage, and notify as manager if necessary.		
5	Ensure that the Operation instructions are visible.		
6	Ensure the hand pump handle is present.		
7	Ensure the Handset control is working correctly and there are no signs of damage.		
8	Ensure the Platform is clean and dry.		
9	Ensure the Box Lock is working correctly.		
10	Ensure the Carriage centre lock is working correctly.		
11	Ensure the Handrails are clean, working correctly and rust free.		
12	Ensure the Handrail guards are present and undamaged.		
13	Ensure the Roll-Off-Ramp operates correctly and lands on the ground.		
14	Ensure the warning lights are operating correctly before using the lift (If fitted).		

IF IN DOUBT, CONTACT THE MANUFACTURER

10.4 Monthly Inspections

Regular lift maintenance is recommended at MONTHLY intervals by the lift operating company. The working life of your lift will be greatly prolonged if these steps are adhered to.

This should include the following:

1. Check for obvious signs of damage, replace parts as necessary.
2. Check the operation and stowing of the lift, if the platform base is touching the bottom of the box, adjust the height by raising the N/S and O/S stowing bolts.
3. Check the box lock operation by attempting to pull the lift out of the box with the lock engaged. If this can be achieved, the hook will need to be LOWERED in relation to the handle.
4. Check the carriage lock operation by attempting to push the lift back into the box once the platform has been fully deployed. If this can be achieved the carriage lock mechanism will require adjustment.
5. Check the rear roll-off-ramp operation. Check ramp 'dummy pin' which holds ramp in vertical position whilst lift is stowed. Lubricate roll-off pivot with silicone spray in accordance with instructions on 10.6.
6. Check bridging plate operates correctly, it must land flat on the vehicle floor, if not see Bridge plate adjustment instructions 7.7.
7. Check platform extension operation and security of alloy sheet. N.B. do not over-tighten fastenings which hold extension alloy. Check platform end stops are tight and vertically aligned.
8. Check hand rail operation and security. If components are corroded they should be replaced due to potential hazard to users! Check location pivot pins, these should be fully secure.
9. When cleaning the vehicle wash the working platform of the lift in accordance with instructions on 9.1.
10. Check Up/ Down pump for fluid leaks and loose/ corroded electrics. Top up reservoir (with lift at ground position) with PLS Blue Hydraulic Oil, do NOT overfill. Coat any exposed electrics with dielectric grease (or similar) to protect.
11. Check oil level visually using the dip stick or against the oil level indicator marks on the oil tank.
12. Check for oil contamination, usually a white creamy liquid on the underside of the filler cap, or visible water.
13. Lubricate lift in accordance with instructions on 10.6.

10.5 Six Monthly Inspections

For Factory Trained Lift Engineers

As monthly safety checks plus:

1. Check arm pivot pins, bushes, bearings and retaining grub screws.
2. Check cylinder rod clevis and grub screws.
3. Check cylinders for oil leaks. Replace piston seal if excessive oil leaking from the cylinder.
4. Remove the bottom sheet, check all hoses and fittings for leaks, wear or perishing. When bottom sheet is replaced remember to position retaining bolts with nuts (on the OUTSIDE of stowage box). If access to the lift is not possible COMPLETELY REMOVE LIFT FROM STOWAGE BOX (ENSURING THE PLATFORM IS CORRECTLY SUPPORTED)
5. Check guide bearings, cam followers and carriage mechanisms.
6. With the lift fully powered out, and the bottom sheet removed: Clean the interior of the stowage cassette and degrease the side tracks and guide racks with solvent. DO NOT GREASE TRACKS OR CENTRE GUIDE, USE SILICONE SPRAY OR ACF50 ONLY.
7. Check the UMBILICAL (main hydro/electrical cable between carriage and inside of box) for signs of wear, if split or damaged this must be replaced! NOTE: Umbilical should not be twisted.
8. Check platform wear strips (on underside of platform extension surface) for wear, or 'fastening protrusion' replace if necessary.
9. Check bridging plate for correct operation. The bridging plate must land flush with the vehicle floor and NOT from a trip hazard.
10. Check that the platform does not have a side-to-side 'kick'. If a 'kick' is present the lifting cylinders should be adjusted.
11. Check that the lift mounting brackets and track bolts are tight / secure and free from damage. Corrosion in this area of the lift is likely to occur, however if in an advanced state components should be exchanged for new items.
12. Check manual hand pump operation (see Auxiliary Hand Pump Operation Procedure), lubricate all pivot points. REMEMBER TO RETURN ANY MANUAL OVERRIDE TAPS TO THEIR CLOSED POSITION.
13. Check condition and security of arm side guards, replace if damaged.
14. Check right hand arm hose tray, check hose and cable condition and all cable ties are in place correctly.
15. Check the handset wiring by powering the lift whilst manipulating the cable in any direction.
16. Check oil level visually using the dip stick or against the oil level indicator marks on the oil tank.
17. Check for oil contamination, usually a white creamy liquid on the underside of the filler cap, or visible water.

IF IN DOUBT CONTACT THE MANUFACTURER

Lubrication Diagram Access

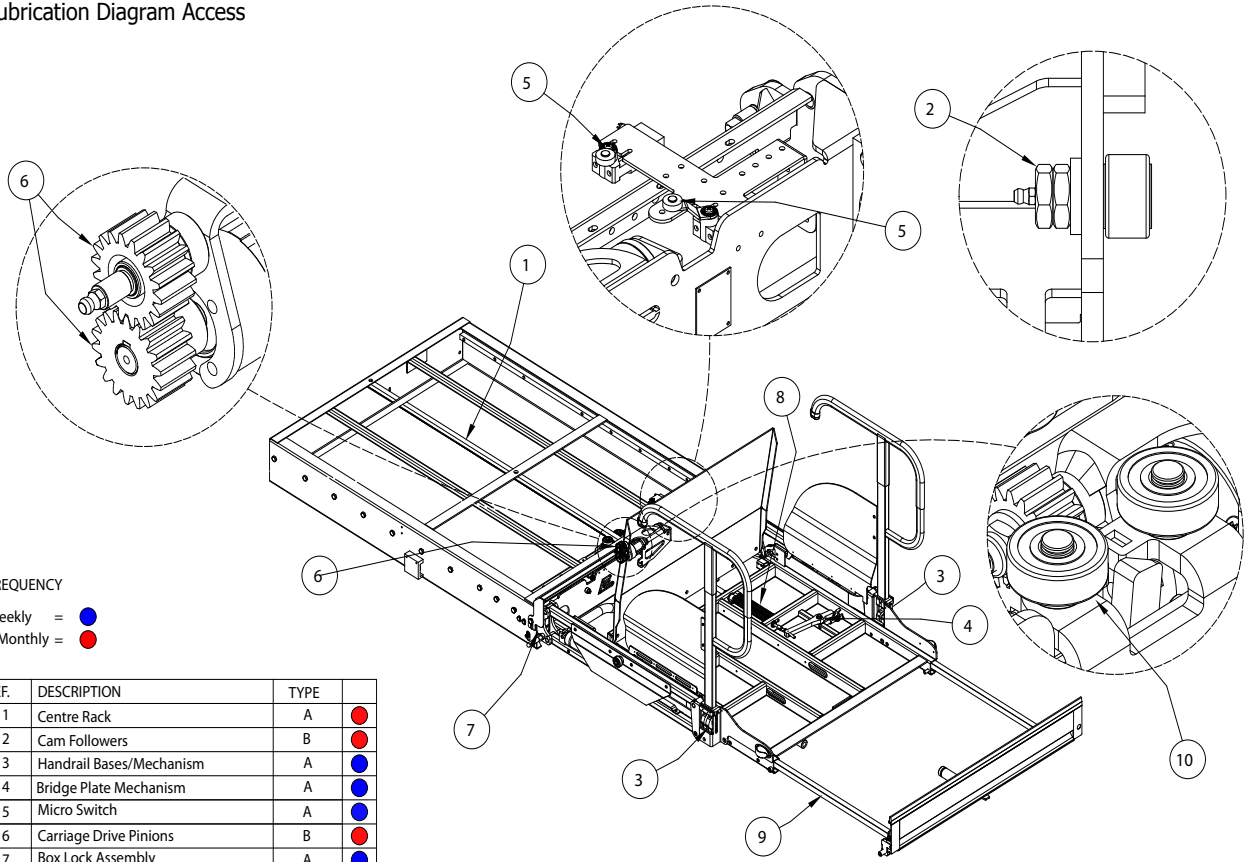

FREQUENCY

Weekly =
6 Monthly =

REF.	DESCRIPTION	TYPE	
1	Centre Rack	A	
2	Cam Followers	B	
3	Handrail Bases/Mechanism	A	
4	Bridge Plate Mechanism	A	
5	Micro Switch	A	
6	Carriage Drive Pinions	B	
7	Box Lock Assembly	A	
8	Bridge Plate Springs	A	
9	Platform Extension Legs	C	
10	Centre Bearing Assy	B	
	All Other Springs	A	

TYPE	LUBRICATION SPECIFICATION
A	ACF50
B	LITHIUM GREASE EP 2
C	HEAVY DUTY SILICON TYPE 40

*Lift MUST be cleaned, lubricated and maintained in accordance with current LOLER regulations. Do not Grease any components externally as this attracts dirt and dust.

10.7 31 Point Check

LOLER / SERVICE Repair Check List		Lift no:		
		Vehicle Reg:		
Engineer's Name:		Date:		
Customer Details:				
Address, Contact:				
Tel. Number:		Poor	Ok	Good
1	Ramp stop (roll-off) operation/condition			
2	Condition of ramp stop cylinder (corrosion, leaks, loose caps)			
3	Bridging plate operation/condition			
4	Carriage lock and rocker(s) working correctly			
5	Platform stability			
6	Platform extension operation (stops tight)			
7	Platform stowage set correctly			
8	Handrail and side guard operation/condition			
9	Cleating and wearstrip condition			
10	All set pins secure/ Grub screws tight			
11	All fasteners tight			
12	In/Out Motor operation/condition/ check top cog			
13	Condition of all bearings and camfollowers/ grease x 4			
14	Umbilical hose condition			
15	Check lift isolator (cab or door switch)			
16	Condition of lifting cylinders (corrosion, leaks, loose caps)			
17	Up/Down hydraulic pump operation/condition (relief valve) with SWL on lift			
18	Hand pump operation/condition/ check tightness			
19	All hoses in good condition/ arm hose/ cylinder hoses and platform pipe & hose.			
20	Hydraulic fittings in good condition/ ports on power pack tight			
21	Check oil level visually using the dip stick or against the oil level indicator marks on the oil tank.			
22	Check for oil contamination, usually a white creamy liquid on the underside of the filler cap, or visible water.			
23	Wiring loom condition (crimps, fuse holder, earth wires, etc)			
24	Box lock operation/condition			
25	Condition of box tracks (not bent or indented)			
26	Top and bottom sheets secure			
27	Box brushes present and secure			
28	Condition of stowage box and fitting brackets			
29	Lift correctly lubricated/ cam followers / extension/ switches and cam and cranks.			
30	If powermatic, in/out operation & switches set correctly			
31	Speed of operation acceptable			
32	Handset condition			
33	Labels and operating instructions			
Engineers Comments				

11.1 Safe Disposal

When disposing of the machine, please comply with the procedures imposed by the laws in force.

Generally the machine should be disassembled and identical materials grouped together these must then be disposed of in accordance with local environmental legislation.

Contact the local Authority to ensure that specific materials such as lubricants, electrical/ electronic components are disposed of correctly.

YOU MUST RETURN THE MACHINE ID PLATES AND ANY OTHER CONNECTED DOCUMENTS TO PLS WHEN THE PRODUCT HAS BEEN RECYCLED.

12.1 Trouble shooting

Problem	Fault	Solution
Lift not operating	Circuit breaker or fuse tripped	Reset circuit breaker or replace fuse
	Cab switch not turned on	Turn cab switch on
	Door switch sticking	Lubricate and free switch
	Low voltage	Charge battery
	Poor earth	Check battery cables & earth points
	Corrosion on crimped cables	Re-crimp cables and clean corrosion
	Loose power-pack electrical connections	Check electrical connections
	Handset failure	Replace handset
Lift stuck in box	Box lock not fully disengaged	Make sure lock handle is pulled fully up
	Lift is pressurized up in box	Press Down on handset to lower lift or open the down valve to release pressure
	Box grounded and damaged underneath	Repair / replace box
Lift not powering IN	Motor cut-off switch (In switch)	Check switch adjustment & lubricate
	Umbilical damaged	Replace umbilical cable
	Carriage solenoid failure	Replace solenoid
	Motor failure	Replace motor
	Carriage lock not lowering correctly	Check & readjust carriage lock stowing
	Carriage lock switch failure	Check switch adjustment & lubricate
Lift not powering OUT	Lift Up switch (Out switch)	Check switch adjustment & lubricate
	Umbilical damaged	Replace umbilical cable
	Carriage solenoid failure	Replace solenoid
	Motor failure	Replace motor
	Loose carriage electrical connections	Check plugs, sockets & pins
Lift not powering UP	Low oil	Add PLS Blue Hydraulic oil
	No pump pressure	Check and readjust pressure relief
	Hose burst	Replace
	Lift Up switch (Out switch)	Check switch adjustment & lubricate
	Manual release left open	Close manual override
	Down valve stuck open (contamination)	Remove / clean and replace
	Low voltage	Charge battery
Lift not lowering DOWN	Contamination in PC Burst valves	Replace PC burst valve set
	Crash vales locked (cold weather)	Readjust crash valve gap
	Down valve not opening due to low voltage	Charge battery
	Down valve sticking (contamination)	Remove / clean and replace
	Down valve coil failure	Check / replace

Problem	Fault	Solution
Platform Extension will not extend	Handrails not raised up	Raise up handrails into locked position
	Extension legs not free from stow bolts	Power lift UP to higher position
	Lack of lubrication	Lubricate moving parts
	End stops loose	Tighten end stops
	Extension pipe / hose catching in platform	Reposition hose / pipe
Platform Extension will not retract	Extension pipe / hose catching in platform	Reposition hose / pipe
	Extension legs hitting stow bolts	Power lift UP to higher position
	Lack of lubrication	Lubricate moving parts
	Extension pulled out to hard, End stops jammed on rollers	Reset, Replace extension end stops
Ramp will not deploy	Lack of lubrication	Lubricate pivot sand moving parts
	Ramp damaged	Replace
	Cylinder failure	Replace
	Air in Cylinder	Bleed out air in cylinder
Bridge Plate operation not operating smoothly / noisy	Lack of lubrication	Lubricate pivot sand moving parts
	Bridge plate parts damaged	Replace damaged parts
Bridge plate not touching vehicle floor	Push rod position incorrect	Adjust toggle joints or adjustable crank
	Cam & Crank slipped	Reset, Replace Cam & Cranks
Bridge plate not lifting to vertical position when lowering lift	Bridge plate compression springs force to low	Adjust spring collars (do not bottom out springs)
Bridge plate not lifting to vertical position when powering lift out of box	Torsion bars twisted / broken	Replace Torsion Bars
Lift platform jamming on arms when powering UP	Incorrect operation due to Under stowing extension	Lower lift and retract extension
Handrail rattling / loose	Handrail pins loose or missing	Reset, Replace pins
Handrails not locking when raised up	Handrail damaged	Replace
	Handrail lock out of adjustment	Readjust Handrail Lock
Auxiliary hand pump not working	Air in system	Bleed out air, open manual override valve and pump hand pump 10 times, close and try again

13.1 Wiring Diagram- Power Pack

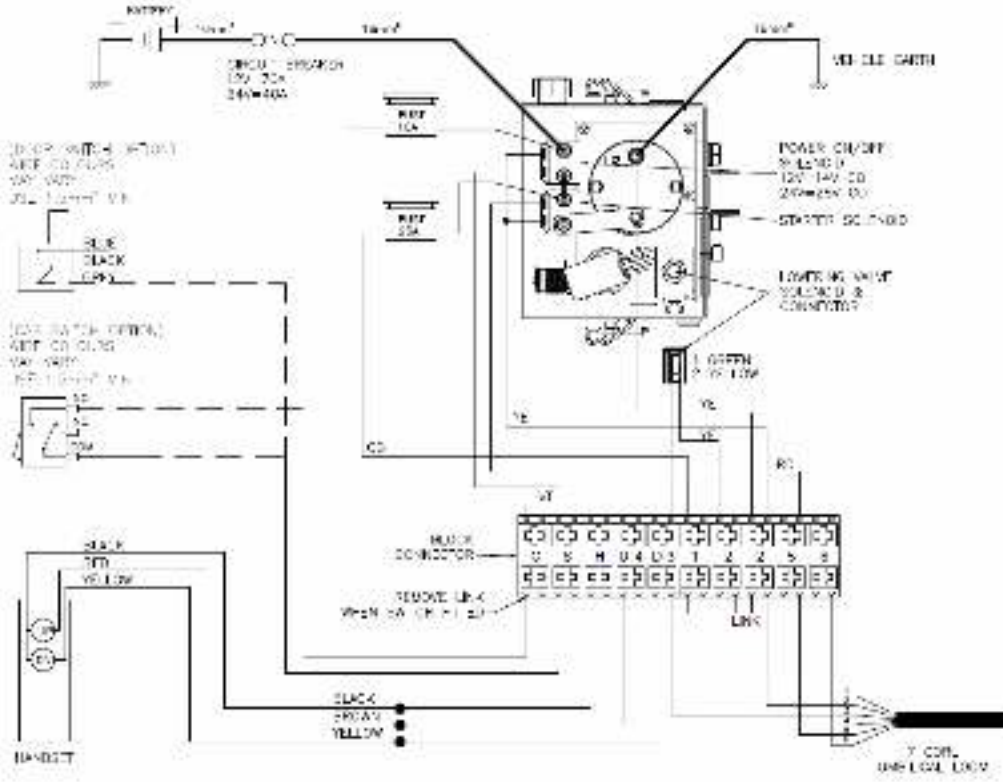

13.2 Wiring Diagram- Lift

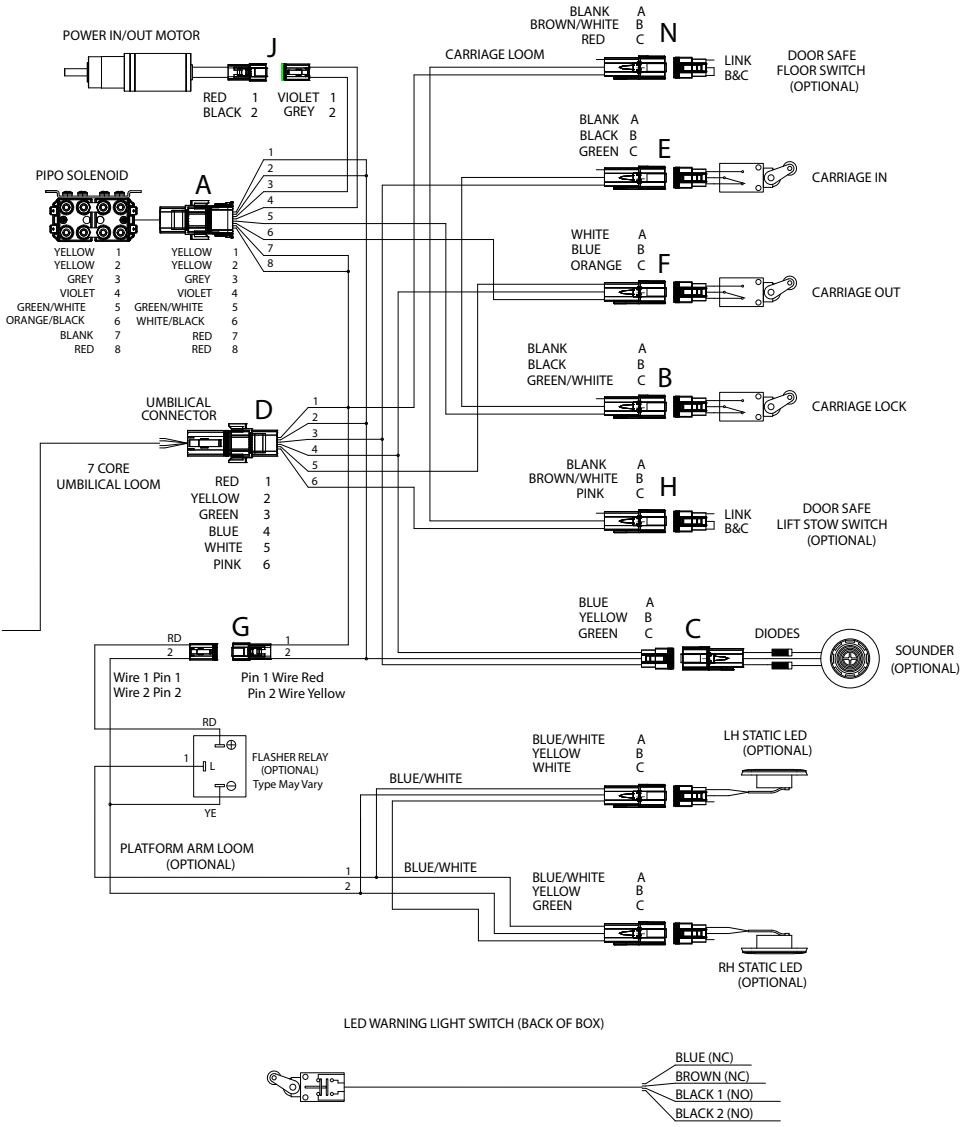

This micro switch is used to signal when the lift is IN & OUT of stow. It can be used to signal a warning light or buzzer on the dashboard. It should NOT be hardwired to the vehicle brakes.

13.3 Hydraulic Diagram

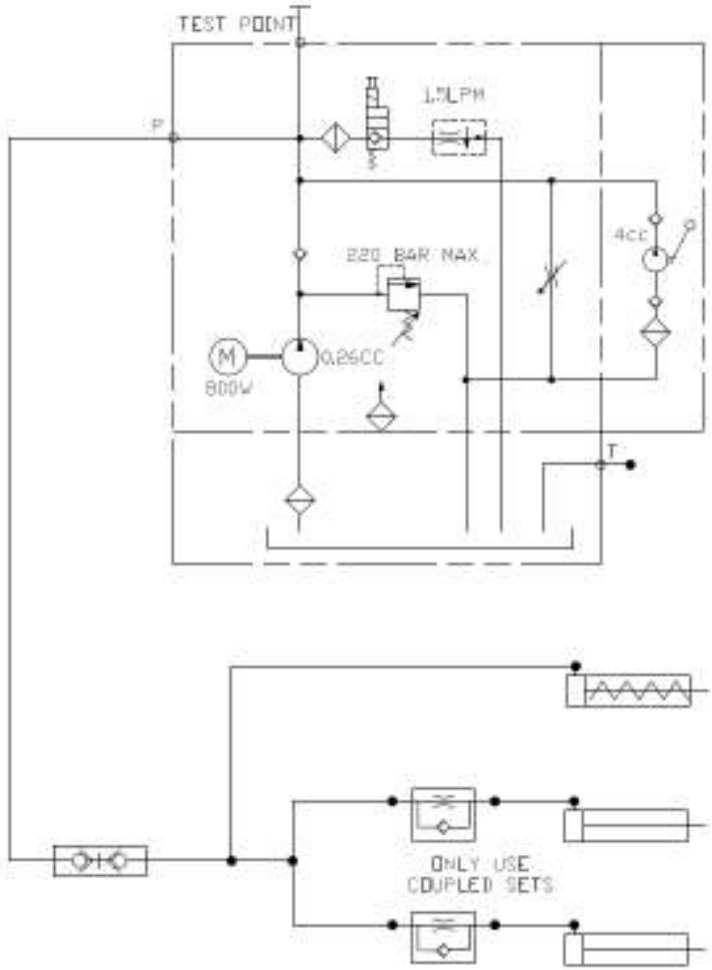

14.1 Contents List of Spare Parts

For spare parts, either, use the assembly drawings to identify the required part, then add these to the following form or contact the PLS spare parts department and talk to one of our staff.

Description:-

1. Box Assembly
2. Box Rear Switch
3. Box Lock Assembly LH
4. Box Umbilical
5. Carriage Assembly
6. In/ Out Motor Assembly
7. Front Centre Bearing
8. Carriage Extended Rear Bearing
9. Carriage Switch Bracket Assembly
10. DS2 Ready Standard Spec (Up to Feb 2018)
11. DS2 Ready Lite Spec (Up to Feb 2018)
12. Carriage Hydraulics
13. Handrail “H” Assembly
14. Single Throw In Handrail
15. Single Throw Out Handrail
16. Lower Left Arm
17. Lower Right Arm
18. Upper Left Arm
19. Upper Right Arm
20. Arm Cylinders
21. Arm Brace
22. Bridge Plate Assembly
23. Bridge Plate Alloy
24. Platform “H” Single Mechanism
25. Platform Alloy
26. Platform Extension
27. Extension Alloy
28. Extension Pipe and Hoses
29. Roll-Off-Ramp
30. External Enclosed Pack, Horizontal Position
31. Internal Enclosed Pack, Vertical Position
32. Standard Handset Kit
33. Handset Kit

14.2 Spare Parts- Request From

PLS
A MOBILITY NETWORKS COMPANY

SPARE PARTS REQUEST FORM

FROM		Mr.	

SPARE PARTS DEPARTMENT
Email: parts@pls-access.co.uk

DESCRIPTION	Qty

PRIORITY	URGENT ☐	NORMAL ☐
SHIPMENT		
PAYMENT		
DESTINATION		
SIGNATURE	DATE	

Box Assembly

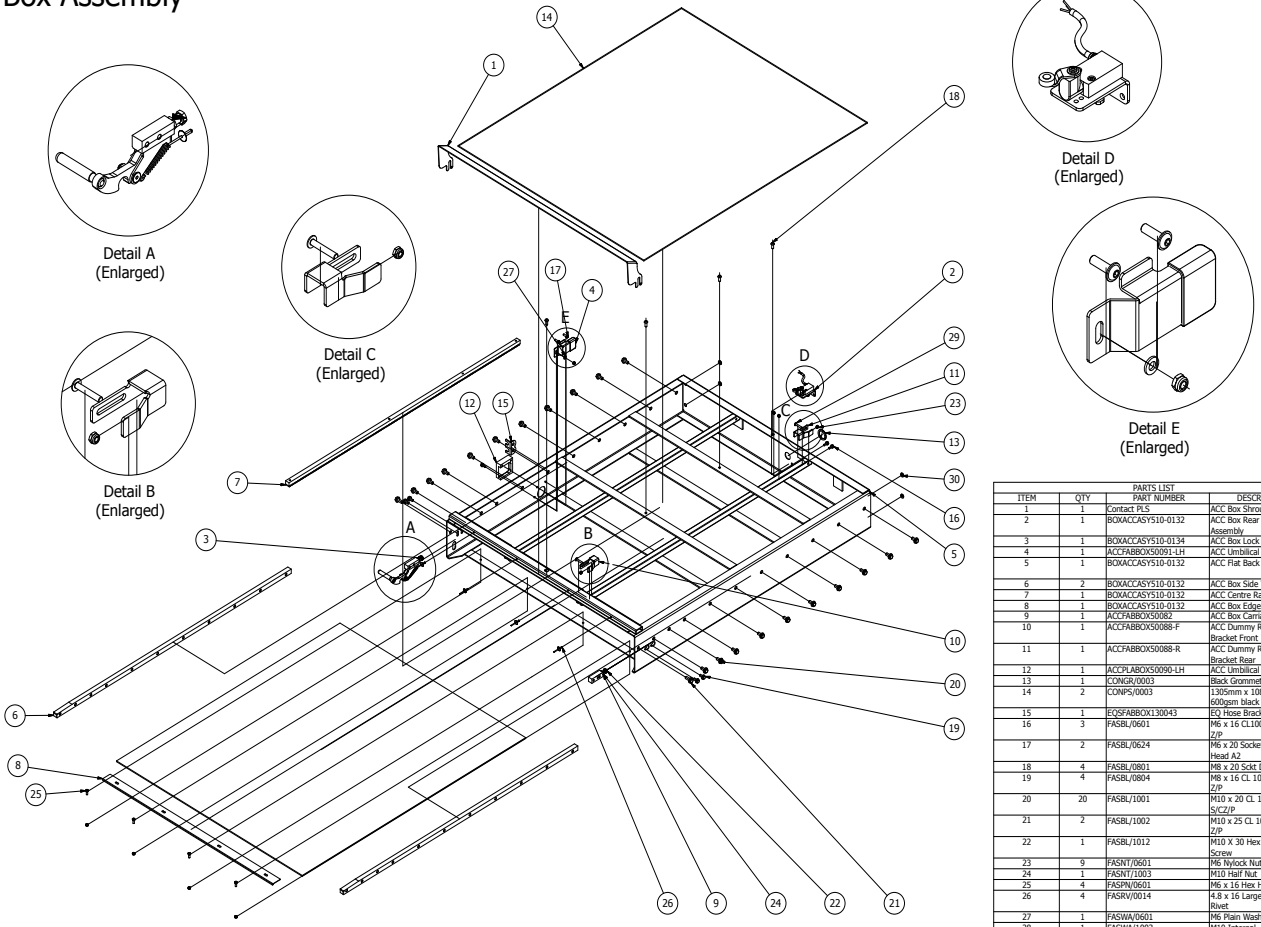

Note:- Fixings may vary

PARTS LIST			
ITEM	QTY	PART NUMBER	DESCRIPTION
1	1	Contact PLS	ACC Box Shroud
2	1	BOXACCASY510-0132	ACC Box Rear Switch Assembly
3	1	BOXACCASY510-0134	ACC Box Lock Assembly LH
4	1	ACCFABBOX50091-LH	ACC Umbilical Bracket LH
5	1	BOXACCASY510-0132	ACC Flat Back Box 2 Strap
6	2	BOXACCASY510-0132	ACC Box Side Track
7	1	BOXACCASY510-0132	ACC Centre Rack FB
8	1	BOXACCASY510-0132	ACC Box Edge
9	1	ACCFABBOX50082	ACC Box Carriage Stop
10	1	ACCFABBOX50088-F	ACC Dummy Rail Switch Bracket Front
11	1	ACCFABBOX50088-R	ACC Dummy Rail Switch Bracket Rear
12	1	ACCPLABOX50090-LH	ACC Umbilical Block LH
13	1	CONGR/0003	Black Grommet 40mm x 3mm
14	2	CONPS/0003	1305mm x 1085mm x 4mm 600gsm black correx sheets
15	1	EQSFABBOX130043	EQ Hose Bracket 2015
16	3	FASBL/0601	M6 x 16 CL100 HT HEX S/L Z/P
17	2	FASBL/0624	M6 x 20 Socket Flange Dome Head A2
18	4	FASBL/0801	M8 x 20 Sckt Dome Hd Set
19	4	FASBL/0804	M8 x 16 CL 100 HT HEX S/L Z/P
20	20	FASBL/1001	M10 x 20 CL 100 HT HEX S/CZ/P
21	2	FASBL/1002	M10 x 25 CL 100 HT HEX S/L Z/P
22	1	FASBL/1012	M10 X 30 Hex Head Set Screw
23	9	FASNT/0601	M6 Nylock Nut
24	1	FASNT/1003	M10 Half Nut
25	4	FASPN/0601	M6 x 16 Hex Hd Set Screw
26	4	FASRV/0014	4.8 x 16 Large Flange Head Rivet
27	1	FASWA/0601	M6 Plain Washer Form A
28	1	FASWA/1003	M10 Internal Star Washer
29	2	FASBL/0633	M6 X 35 Socket Flange Head
30	4	CONGR/0001	Black Grommet 12.5mm x 1.5mm (19433)

Box Rear Switch

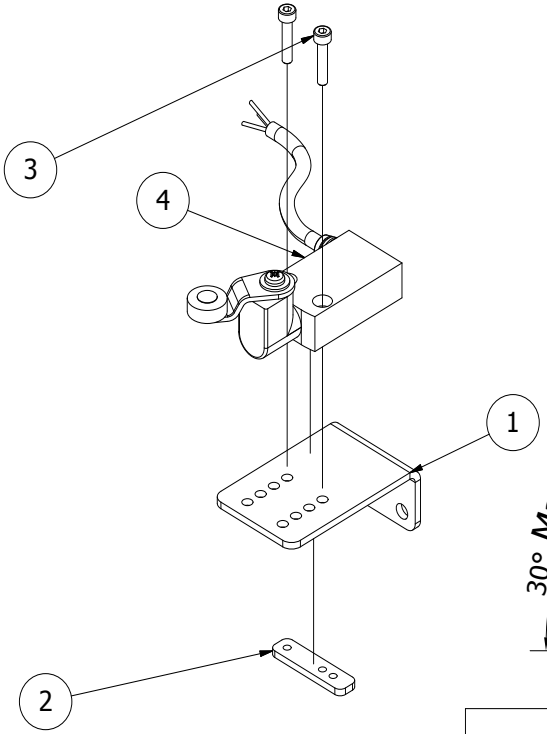

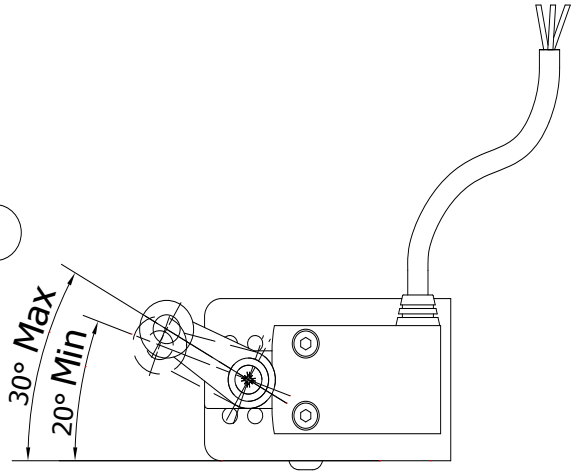

PARTS LIST			
ITEM	QTY	PART NUMBER	DESCRIPTION
1	1	ACCFABCAR50132	ACC Rear Switch Box Bracket
2	1	GNXAFABBOX60039	GNXA Box Lock Tapping Plate
3	2	FASBL/0402	M4 x 20 Socket Head Cap Screw
4	1	MN_550690	Switch XCMN2115L1

Note:- Fixings may vary

Box Lock Assembly LH

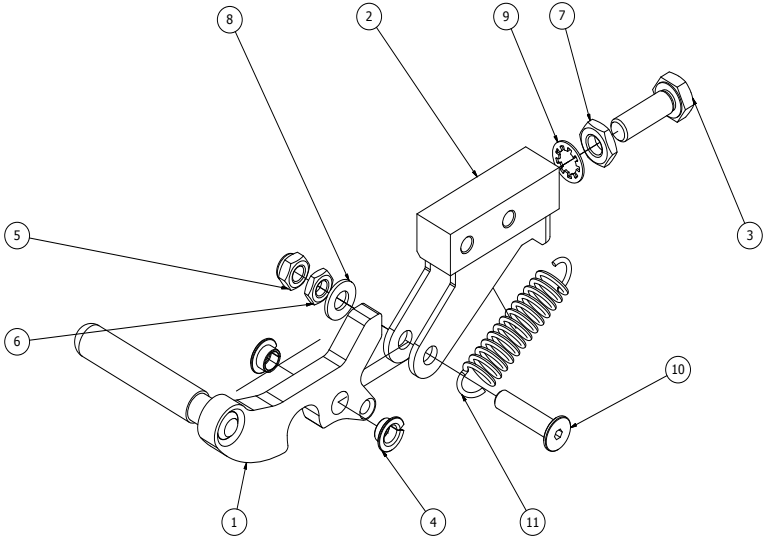

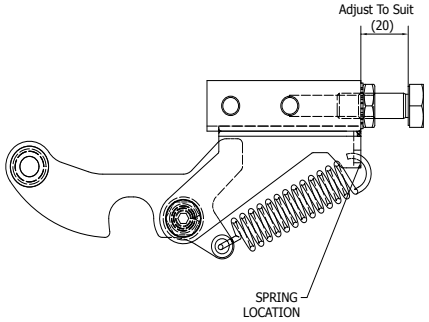

PARTS LIST				
ITEM	QTY	PART NUMBER	REV	DESCRIPTION
1	1	ACCFABBOX50083	8	ACC Box lock Hook Handle
2	1	ACCFABBOX50084	4	ACC Box Stop Lock Bracket
3	1	FASBL/1012	1	M10 X 30 Hex Head Set Screw
4	2	FASBU/0001	1	Flange Glacier Bush 10x8x5.5
5	1	FASNT/0801	1	M8 Nyloc Nut
6	1	FASNT/0802	1	M8 Half Nut
7	1	FASNT/1003	1	M10 Half Nut
8	1	FASWA/0801	1	M8 Plain Washer Form A
9	1	FASWA/1003	1	M10 Internal Star Washer
10	1	GXFABBOX40087	1	GX Box Lock Hook Pin
11	1	GXSPRBOX40084	2	GX Box lock Spring

Note:- Fixings may vary

Box Umbilical

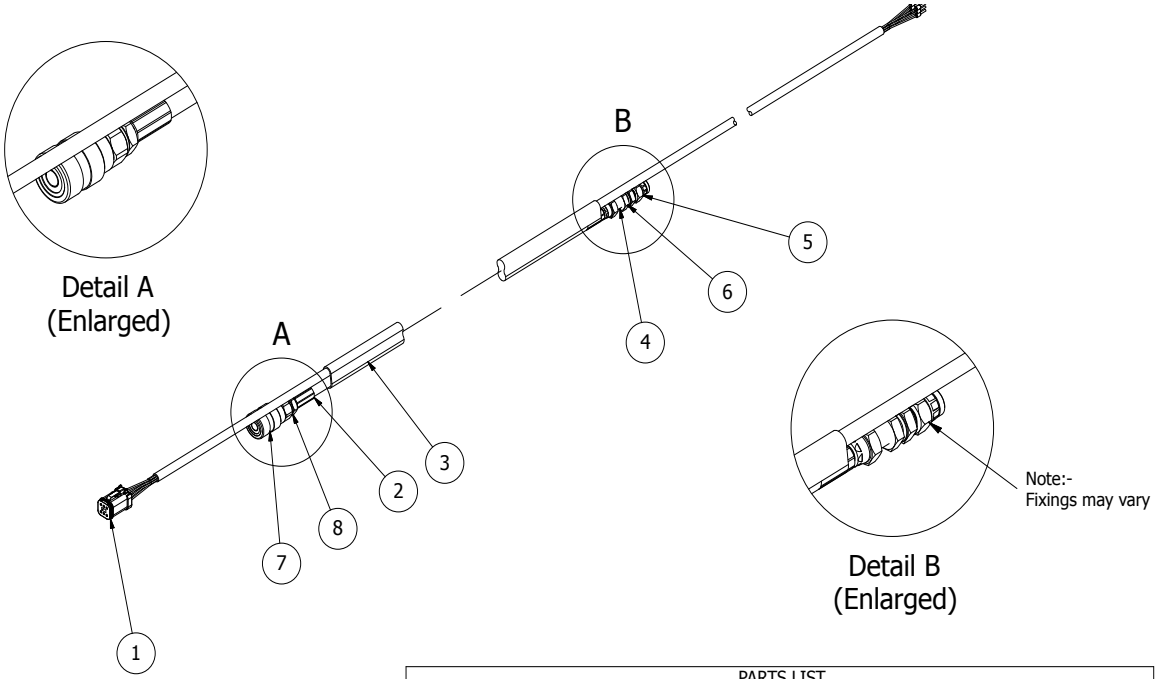

PARTS LIST			
ITEM	QTY	PART NUMBER	DESCRIPTION
1	1	ACC26246	ACC 7 Core Umbilical Loom 3.5m
2	1	Contact PLS	ACC Umbilical Hose
3	Various	ELEHS/0001	25.4mm 3:1 adhesive pe heat shrink tube 25m rolls
4	1	HYDFT/0001	1/4 BSP Bulkhead MM (PLS1)
5	1	HYDFT/0011	Cap 1/4 PLS7
6	1	HYDFT/0014	1/4 BSP Locknut (PLS10)
7	1	HYDPR/0002	QRC CARRIER FEMALE (2040000044)
8	1	HYDWA/0001	1/4 BSP Dowty Seal (Bonded Washer)

Note:- Fixings may vary

Carriage Assembly

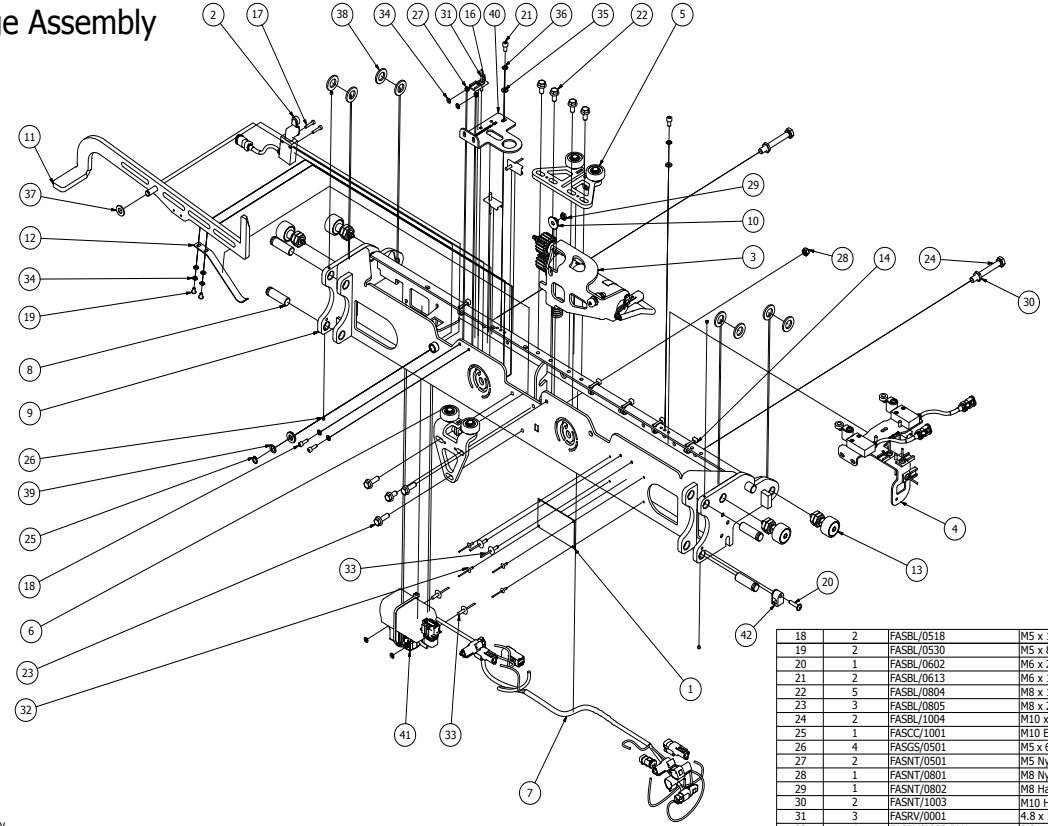

Note:- Fixings may vary

PARTS LIST			
ITEM	QTY	PART NUMBER	DESCRIPTION
1	1	ACC27520	400 SWL Alumium Serial Number Plate
2	1	ACC550690	Blue Switch (XCMN2115L1) With Deustch Plug
3	1	CARACCASY510-0227-12	ACC 12V Parvelux Motor Assembly
4	1	CARACCASY510-0235	ACC Carriage Switch Bracket Assembly
5	1	CARACCASY510-0236	ACC Carriage Extended Rear Bearing Assembly
6	1	CARACCASY510-0237	ACC Front Centre Bearing Assembly
7	1	ACCELCLCL	ACC Carriage Lite Wiring Harness
8	4	ACCFABARM50266	ACC Arm Pin Plain
9	1	Contact PLS	ACC Carriage Lite
10	1	ACCFABCAR50143	ACC Motor Support Boss
11	1	Contact PLS	ACC Carriage Lock Lite
12	1	ACCSPRCAR50136	ACC Carriage Lock Leaf Spring
13	4	BEACF/0001	Cam Follower Straight Nipple MCFR 35 SBX-MGL
14	5	CONCT/0001	Cable Tie 300 x 4.8
15	50.000 g	CONOT/0002	Spheerol EPL2 Grease 400g
16	3	ELECT/0002	Deutsch Attachment Clips (2-6 way female)
17	2	FASBL/0402	M4 x 20 Socket Head Cap Screw
18	2	FASBL/0518	M5 x 16 Socket Head Capscrew
19	2	FASBL/0530	M5 x 8 Socket Head Dome
20	1	FASBL/0602	M6 x 25 Socket Flange Dome Head A2
21	2	FASBL/0613	M6 x 12 Socket Cap Head Screw
22	5	FASBL/0804	M8 x 16 CL 100 HT HEX S/L Z/P
23	3	FASBL/0805	M8 x 25 CL100 HT HEX S/L Z/P
24	2	FASBL/1004	M10 x 80 Hex Head Set Screw
25	1	FASCC/1001	M10 External Circlip
26	4	FASGS/0501	M5 x 6mm Cup Point Grub Screw DIN 914
27	2	FASNT/0501	M5 Nyloc Nut
28	1	FASNT/0801	M8 Nyloc Nut
29	1	FASNT/0802	M8 Half Nut
30	2	FASNT/1003	M10 Half Nut
31	3	FASRV/0001	4.8 x 16 Dome Head Rivet
32	4	FASRV/0008-BLK	3.2 x 10 Large Flange Head Rivet Black
33	4	FASRV/0014	4.8 x 16 Large Flange Head Rivet
34	12	FASWA/0501	M5 Plain Washer Form A
35	2	FASWA/0601	M6 Plain Washer Form A
36	2	FASWA/0603	M6 Internal Star Washer
37	3	FASWA/1091	M10 Nylon Washer Form A
38	8	FASWA/1601	M16 Plain Washer Form A
39	1	FASWA/9102	M10 x 1,0mm S/S Shim Washer
40	1	GNXAFABCAR60130-000	GNXA Carriage Anti Twist Bracket STD
41	1	GXELCPIPWD4008-12V	GX PIPO Solenoid Wiring Harness 12V Assembly
42	1	HYDCL/0001	Stauff Single Hose Clip

In/ Out Motor Assembly

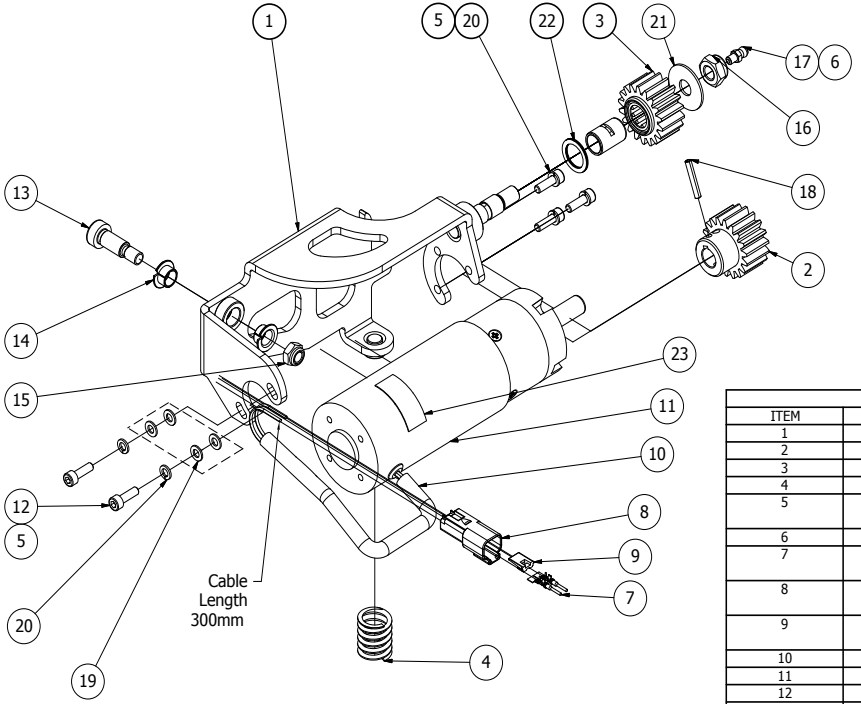

*CRITICAL
FAILURE TO USE ALL FOUR WASHERS
WILL RESULT IN MOTOR BURN OUT

Note:- Fixings may vary

PARTS LIST			
ITEM	QTY	PART NUMBER	DESCRIPTION
1	1	ACCFABCAR50133	ACC Carriage Motor Bracket
2	1	ACCFABCAR50144	ACC Carriage Drive Gear 18T
3	1	ACCFABCAR50145	ACC Rack Gear 18 Tooth
4	1	ACCSPRCAR50146	ACC Carriage Motor Spring
5	0.005 l	ADTHR/0001	A1042 Threadlock Adhesive Permabond 50ml
6	50.000 g	CONOT/0002	Spheerol EPL2 Grease 400g
7	2	ELEDE/0001	Deutsch Reel Pins 1060-16-0122 (4000 p/reel)
8	1	ELEDE/0003	AT04-2P-RD01BLK 2 WAY RECEPTACLE (DTO4-2P-CEO2)
9	1	ELEDE/0009	AW2P (W2P) 2 WAY RECEPTACLE WEDGE
10	0.250 m	ELEHS/0003	Heat Shrink 9.5mm OD 60m Roll
11	1	Contact PLS	Parvelux Carriage Motor
12	5	FASBL/0518	M5 x 16 Socket Head Capscrew
13	1	FASBL/9802	S/S Socket Shoulder Screw M8x10x20
14	2	FASBU/0003	Flange Glacier Bush 10x12x7
15	1	FASNT/0801	M8 Nyloc Nut
16	1	FASNT/1001	M10 Nyloc Nut
17	1	FASOT/0501	M5 Grease Nipple
18	1	FASPN/0401	Spriol Pin 4 x 24mm
19	4	FASWA/0501	M5 Plain Washer Form A
20	5	FASWA/0504	M5 Spring Washer
21	1	FASWA/1004	M10 x 30 Repair Washer
22	3	FASWA/1604	M16 Shim Washer
23	1	CONLB/0002	WL28 LABEL LEGEND TESTED (PACK 350)

Front Centre Bearing

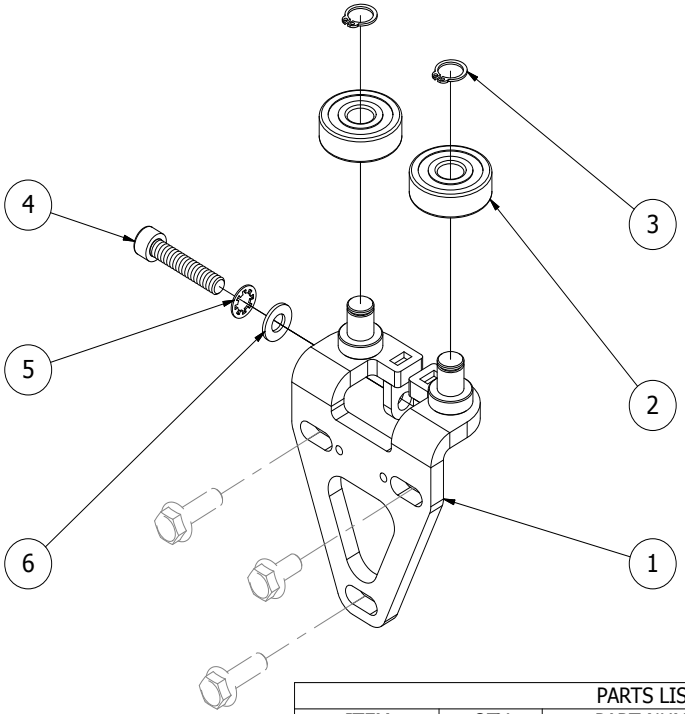

PARTS LIST			
ITEM	QTY	PART NUMBER	DESCRIPTION
1	1	ACCFABCAR50135	ACC Carriage Front Bearing BRKT
2	2	BEARN/0001	Front & Rear Centre Bearing 6301-2RS1
3	2	FASCC/1201	M12 External Circlip
4	1	FASBL/0803	M8 x 40 Socket Head Capscrew
5	1	FASWA/0803	M8 Internal Star Washer
6	1	FASWA/0801	M8 Plain Washer Form A

Note:- Fixings may vary

Carriage Extended Rear Bearing

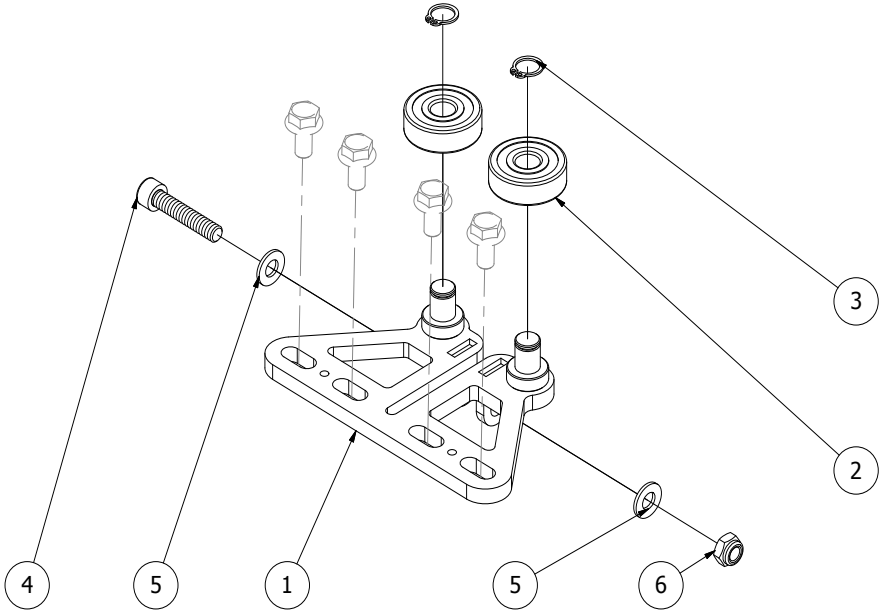

PARTS LIST			
ITEM	QTY	PART NUMBER	DESCRIPTION
1	1	ACCFABCAR50137	ACC Rear Extended Bearing Bracket
2	2	BEARN/0001	Front & Rear Centre Bearing 6301-2RS1
3	2	FASCC/1201	M12 External Circlip
4	1	FASBL/0803	M8 x 40 Socket Head Capscrew
5	2	FASWA/0801	M8 Plain Washer Form A
6	1	FASNT/0801	M8 Nyloc Nut

Note:- Fixings may vary

Carriage Switch Bracket Assembly

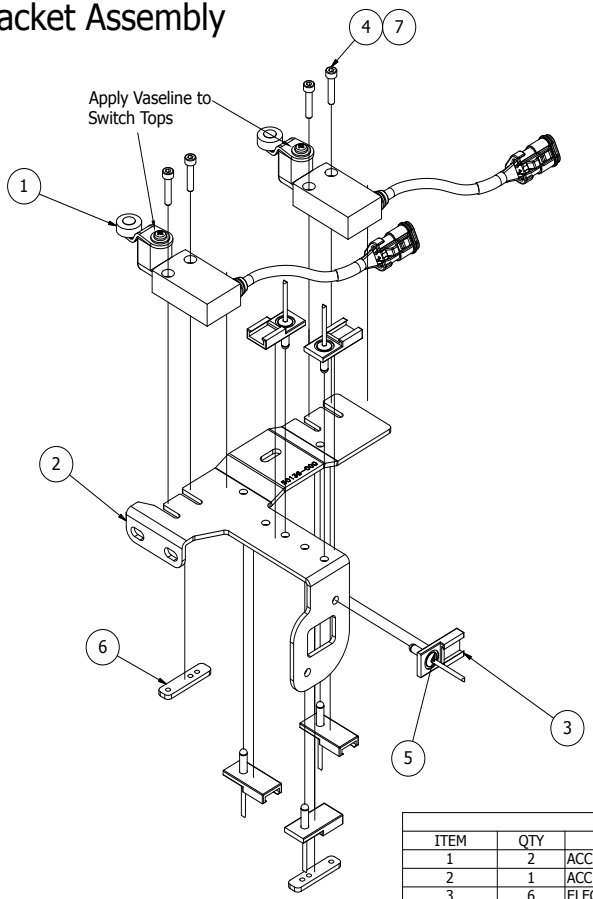

PARTS LIST			
ITEM	QTY	PART NUMBER	DESCRIPTION
1	2	ACC550690	Blue Switch (XCMN2115L1) With Deustch Plug
2	1	ACCFABCAR50139-000	ACC Carriage Switch Bracket
3	6	ELECT/0002	Deutsch Attachment Clips (2-6 way female)
4	4	FASBL/0402	M4 x 20 Socket Head Cap Screw
5	6	FASRV/0001	4.8 x 16 Dome Head Rivet
6	2	GNXAFABBOX60039	GNXA Box Lock Tapping Plate
7	0.005 l	ADTHR/0001	A1042 Threadlock Adhesive Permabond 50ml

Note:- Fixings may vary

DS2 Ready Standard Spec
(Up to Feb 2018)

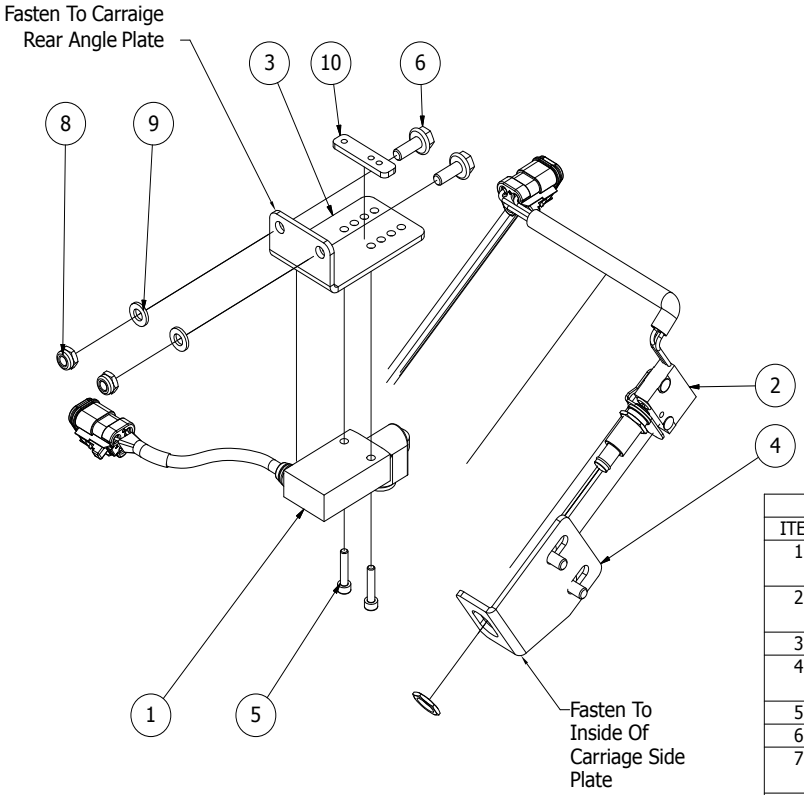

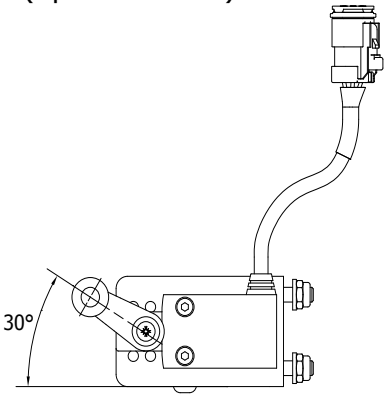

PARTS LIST			
ITEM	QTY	PART NUMBER	DESCRIPTION
1	1	ACC550690	Blue Switch (XCMN2115L1) With Deustch Plug
2	1	ACCELEWHA540-002	ACC DS2 Carriage Switch Wiring Harness Assembly
3	1	ACCFABCAR50132	ACC Rear Switch Box Bracket
4	1	ACCFABCAR50141	ACC Carriage DS2 Arm Switch Bracket
5	2	FASBL/0402	M4 x 20 Socket Head Cap Screw
6	2	FASBL/0601	M6 x 16 CL100 HT HEX S/L Z/P
7	2	FASBL/9601	M6 x 12 Socket Flange Dome Head A2
8	2	FASNT/0601	M6 Nylock Nut
9	2	FASWA/0601	M6 Plain Washer Form A
10	1	GNXAFABBOX60039	GNXA Box Lock Tapping Plate
11	1	DS2-READY	Door Safe Ready Sticker

Note:- Fixings may vary

DS2 Ready Lite Spec
(Up to Feb 2018)

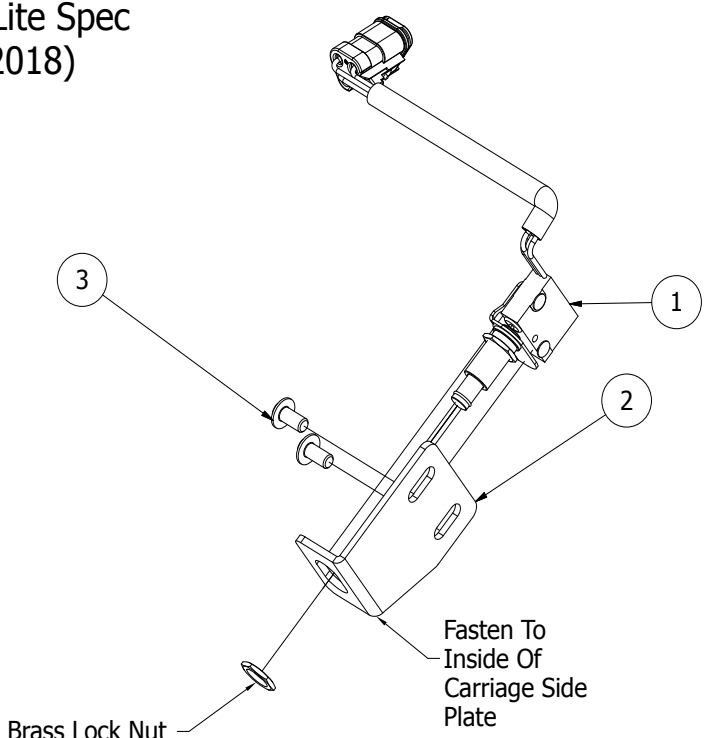

PARTS LIST			
ITEM	QTY	PART NUMBER	DESCRIPTION
1	1	ACCELEWHA540-002	ACC DS2 Carriage Switch Wiring Harness Assembly
2	1	ACCFABCAR50141	ACC Carriage DS2 Arm Switch Bracket
3	2	FASBL/9601	M6 x 12 Socket Flange Dome Head A2
4	1	DS2-READY	Door Safe Ready Sticker

Note:- Fixings may vary

Carriage Hydraulics

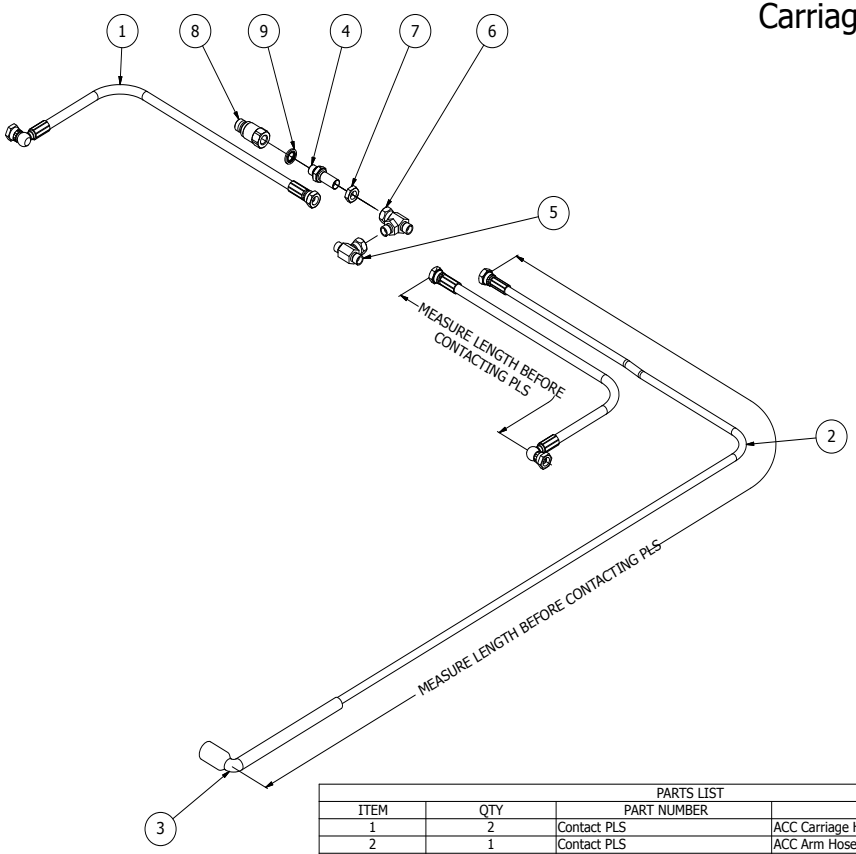

PARTS LIST			
ITEM	QTY	PART NUMBER	DESCRIPTION
1	2	Contact PLS	ACC Carriage Hose
2	1	Contact PLS	ACC Arm Hose
3	0.250 m	ELEHS/0001	25.4mm 3:1 adhesive pe heat shrink tube 25m rolls
4	1	HYDFT/0001	1/4 BSP Bulkhead MM (PLS1)
5	1	HYDFT/0002	1/4 BSP Tee MMF (PLS12)
6	1	HYDFT/0003	1/4 BSP Tee MFM
7	1	HYDFT/0014	1/4 BSP Locknut (PLS10)
8	1	HYDPR/0001	QRC PROBE MALE (2040000045)
9	1	HYDWA/0001	1/4 BSP Dowty Seal (Bonded Washer)

Note:- Fixings may vary

Handrail "H" Assembly

Part No. HANACCASY510-0701-LH

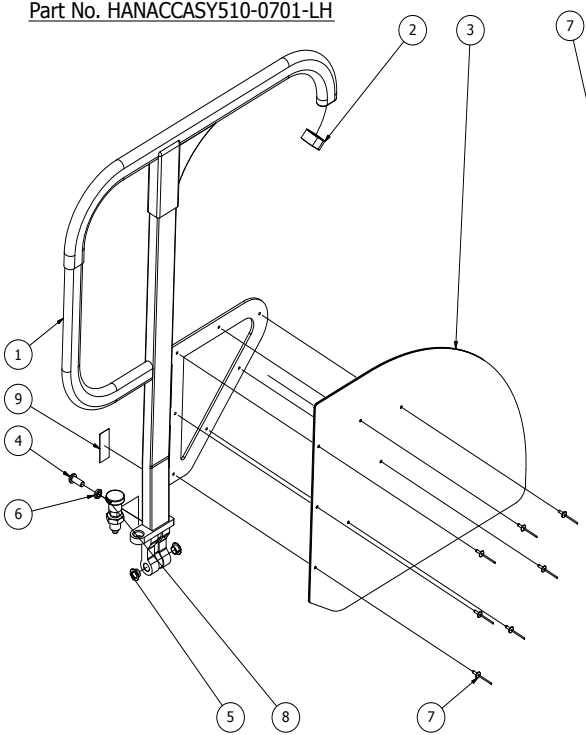

Part No. HANACCASY510-0701-RH

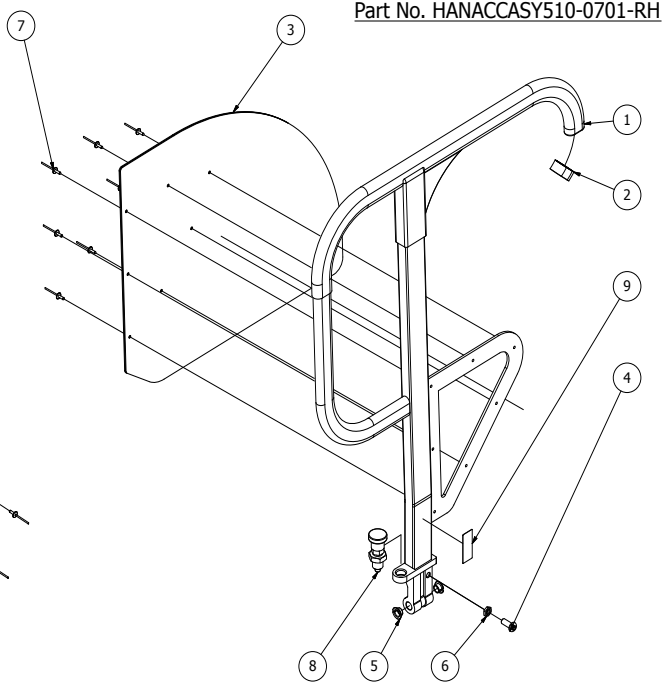

PARTS LIST			
ITEM	QTY	PART NUMBER	DESCRIPTION
1	1	ACCFABHAN50703-LH/RH	ACC Handrail Frame 'H' LH/RH
2	1	ACCPLAHAN50730	ACC Handrail Rubber Bands
3	1	ACCPLAHAN50781	ACC Handrail Guard 'H'
4	1	FASBL/0801	M8 x 20 Sckt Dome Hd Set
5	2	FASBU/0003	Flange Glacier Bush 10x12x7
6	1	FASNT/0802	M8 Half Nut
7	7	FASRV/0008-BLK	3.2 x 10 Large Flange Head Rivet Black
8	1	GN717-8-M16x1.5-BK-NI	S/Steel M16 Index Plunger & Nut
9	1	CONLB/0012	Pull To Unlock Sticker

Note:- Fixings may vary

Single Throw In Handrail

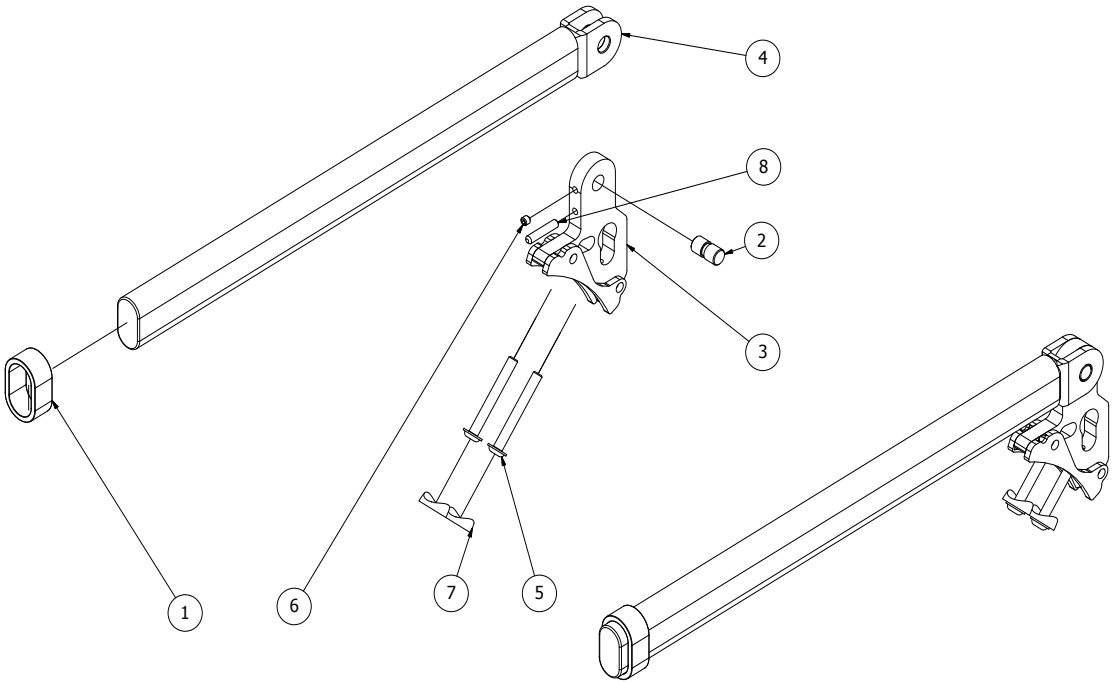

PARTS LIST			
ITEM	QTY	PART NUMBER	DESCRIPTION
1	1	ACCPLAHAN50730	ACC Handrail Rubber Bands
2	1	ACCFABHAN50706	ACC Handrail Throw Over Pin
3	1	ACCFABHAN50746	ACC Handrail Throw Over Base
4	1	ACCFABHAN50747	ACC Handrail Throw Over
5	2	FASBL/9618	M6 x 50 Socket Flange Dome Head A2
6	1	FASGS/0501	M5 x 6mm Cup Point Grub Screw DIN 914
7	2	FSTM6-WSH-SADDLE	M6 Saddle WSH. 102.0200.000.01
8	1	FASGS/0503	M5 x 25mm Cup Point Grub Screw BZP

Note:- Fixings may vary

Single Throw Out Handrail

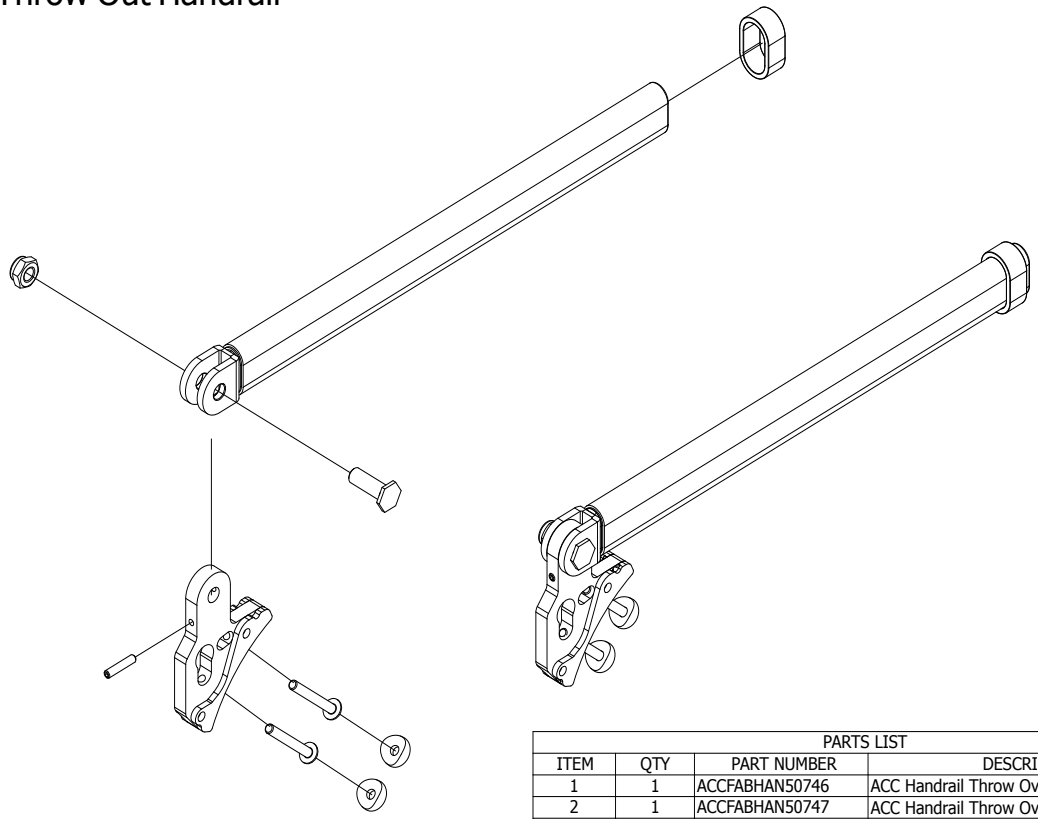

PARTS LIST			
ITEM	QTY	PART NUMBER	DESCRIPTION
1	1	ACCFABHAN50746	ACC Handrail Throw Over Base
2	1	ACCFABHAN50747	ACC Handrail Throw Over
3	1	ACCPLAHAN50730	ACC Handrail Rubber Bands
4	1	FASBL/1016	M10 x 30 Hex Head Set Screw Turned Down
5	2	FASBL/9618	M6 x 50 Socket Flange Dome Head A2
6	1	FASGS/0503	M5 x 25mm Cup Point Grub Screw BZP
7	1	FASNT/1001	M10 Nyloc Nut
8	2	FSTM6-WSH-SADDLE	M6 Saddle WSH. 102.0200.000.01

Note:- Fixings may vary

Lower Left Arm

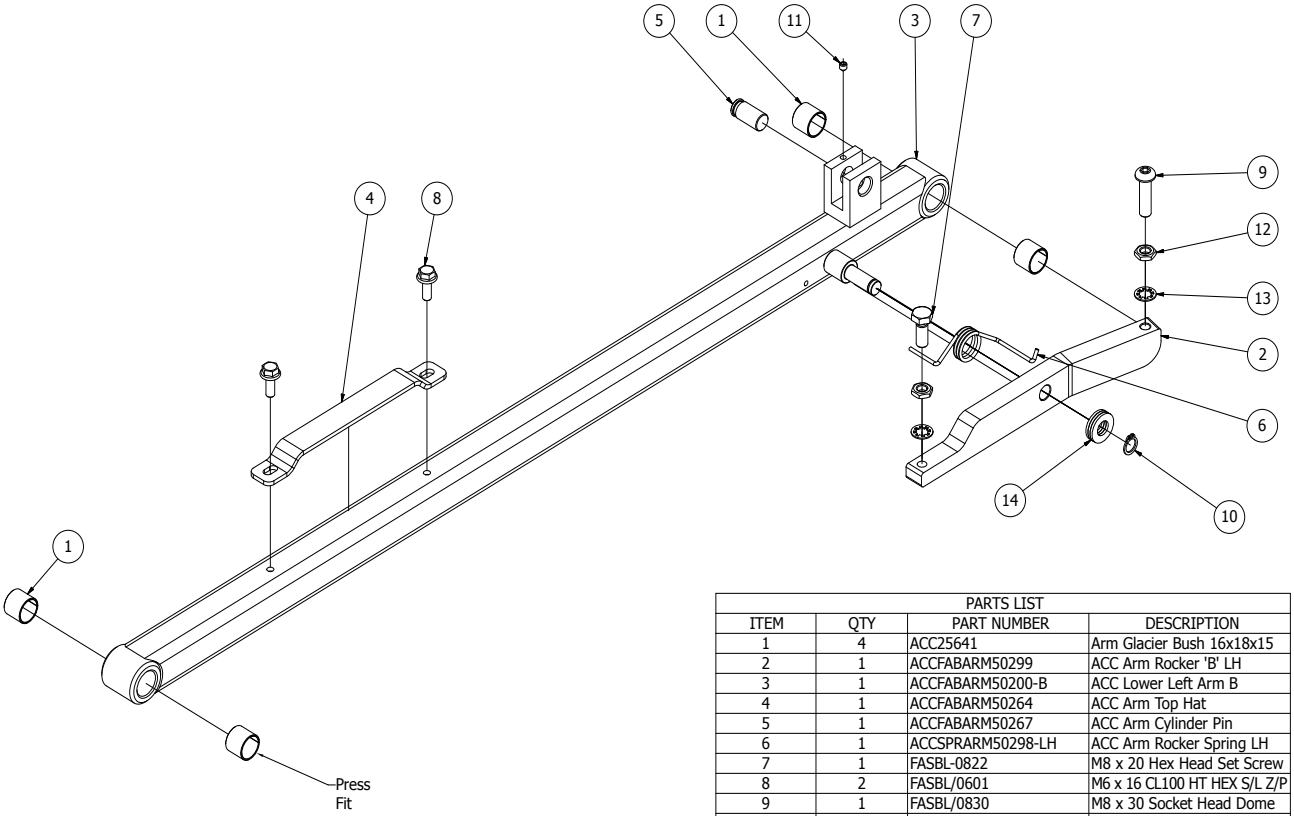

PARTS LIST			
ITEM	QTY	PART NUMBER	DESCRIPTION
1	4	ACC25641	Arm Glacier Bush 16x18x15
2	1	ACCFABARM50299	ACC Arm Rocker 'B' LH
3	1	ACCFABARM50200-B	ACC Lower Left Arm B
4	1	ACCFABARM50264	ACC Arm Top Hat
5	1	ACCFABARM50267	ACC Arm Cylinder Pin
6	1	ACCSPRARM50298-LH	ACC Arm Rocker Spring LH
7	1	FASBL-0822	M8 x 20 Hex Head Set Screw
8	2	FASBL/0601	M6 x 16 CL100 HT HEX S/L Z/P
9	1	FASBL/0830	M8 x 30 Socket Head Dome
10	1	FASCC/1001	M10 External Circlip
11	1	FASGS/0501	M5 x 6mm Cup Point Grub Screw DIN 914
12	2	FASNT/0802	M8 Half Nut
13	2	FASWA/0803	M8 Internal Star Washer
14	3	FASWA/1091	M10 Nylon Washer Form A

Note:- Fixings may vary

Lower Right Arm

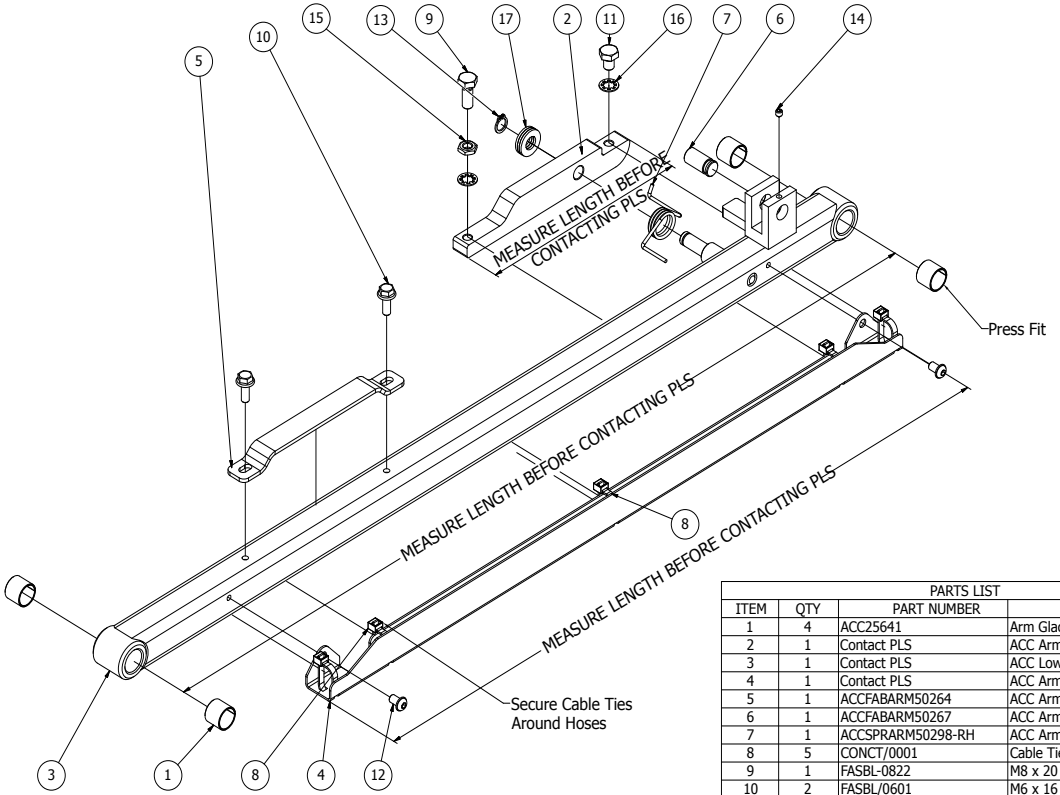

PARTS LIST			
ITEM	QTY	PART NUMBER	DESCRIPTION
1	4	ACC25641	Arm Glacier Bush 16x18x15
2	1	Contact PLS	ACC Arm Rocker RH
3	1	Contact PLS	ACC Lower Right Arm
4	1	Contact PLS	ACC Arm Hose Tray
5	1	ACCFABARM50264	ACC Arm Top Hat
6	1	ACCFABARM50267	ACC Arm Cylinder Pin
7	1	ACCSPRARM50298-RH	ACC Arm Rocker Spring RH
8	5	CONCT/0001	Cable Tie 300 x 4.8
9	1	FASBL-0822	M8 x 20 Hex Head Set Screw
10	2	FASBL/0601	M6 x 16 CL100 HT HEX S/L Z/P
11	1	FASBL/0813	M8 x 10 Hex Head Set Screw
12	2	FASBL/9612	M6 x 10 Socket Flange Head Set A2
13	1	FASCC/1001	M10 External Circlip
14	1	FASGS/0501	M5 x 6mm Cup Point Grub Screw DIN 914
15	1	FASNT/0802	M8 Half Nut
16	2	FASWA/0803	M8 Internal Star Washer
17	3	FASWA/1091	M10 Nylon Washer Form A

Note:- Fixings may vary

Upper Left Arm

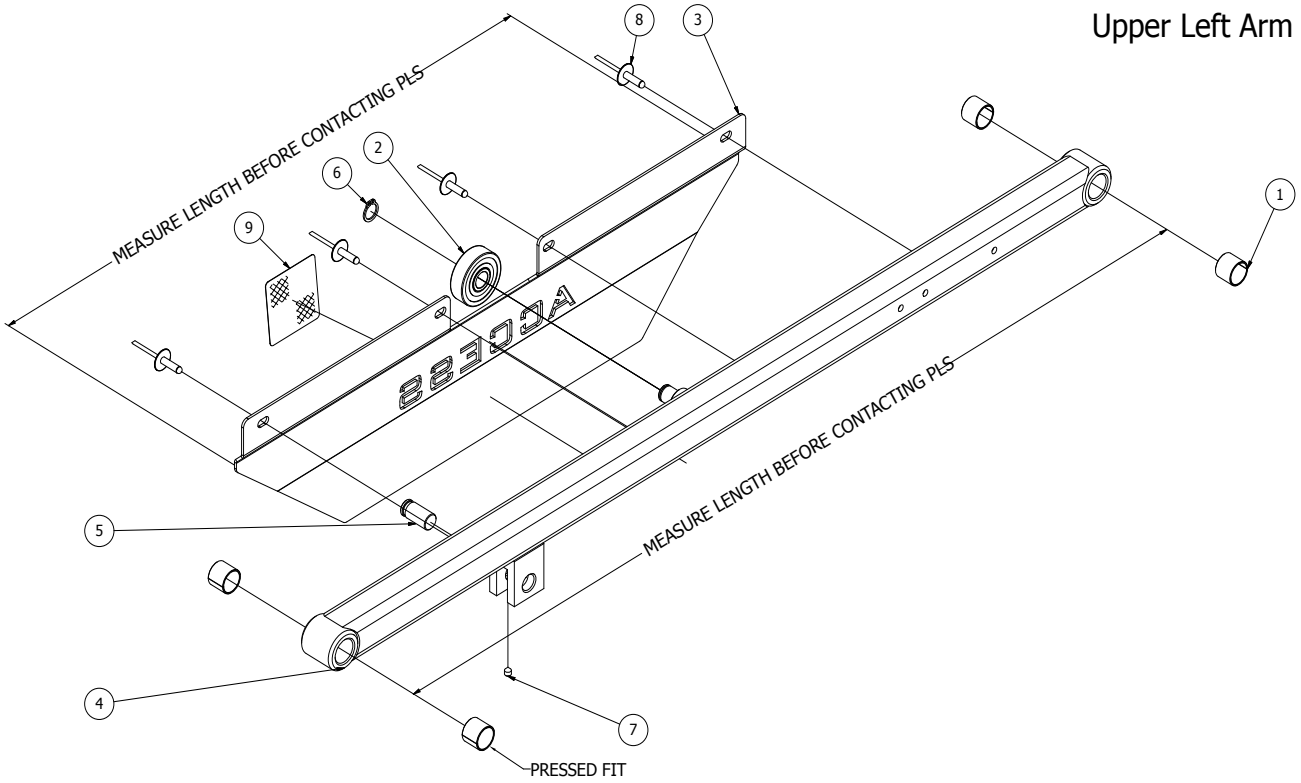

PARTS LIST			
ITEM	QTY	PART NUMBER	DESCRIPTION
1	4	ACC25641	Arm Glacier Bush 16x18x15
2	1	ACC26376	Arm Bearing 6203 2RS With Insert
3	1	Contact PLS	ACC Arm Guard
4	1	Contact PLS	ACC Upper Left Arm
5	1	ACCFABARM50267	ACC Arm Cylinder Pin
6	1	FASCC/1201	M12 External Circlip
7	1	FASGS/0501	M5 x 6mm Cup Point Grub Screw DIN 914
8	4	FASRV/0014	4.8 x 16 Large Flange Head Rivet
9	1	ACCPRISREFYELTAPE-Y	YELLOW REFLECTIVE PRISMATIC TAPE 50 x 50 x 50m

Note:- Fixings may vary

Upper Right Arm

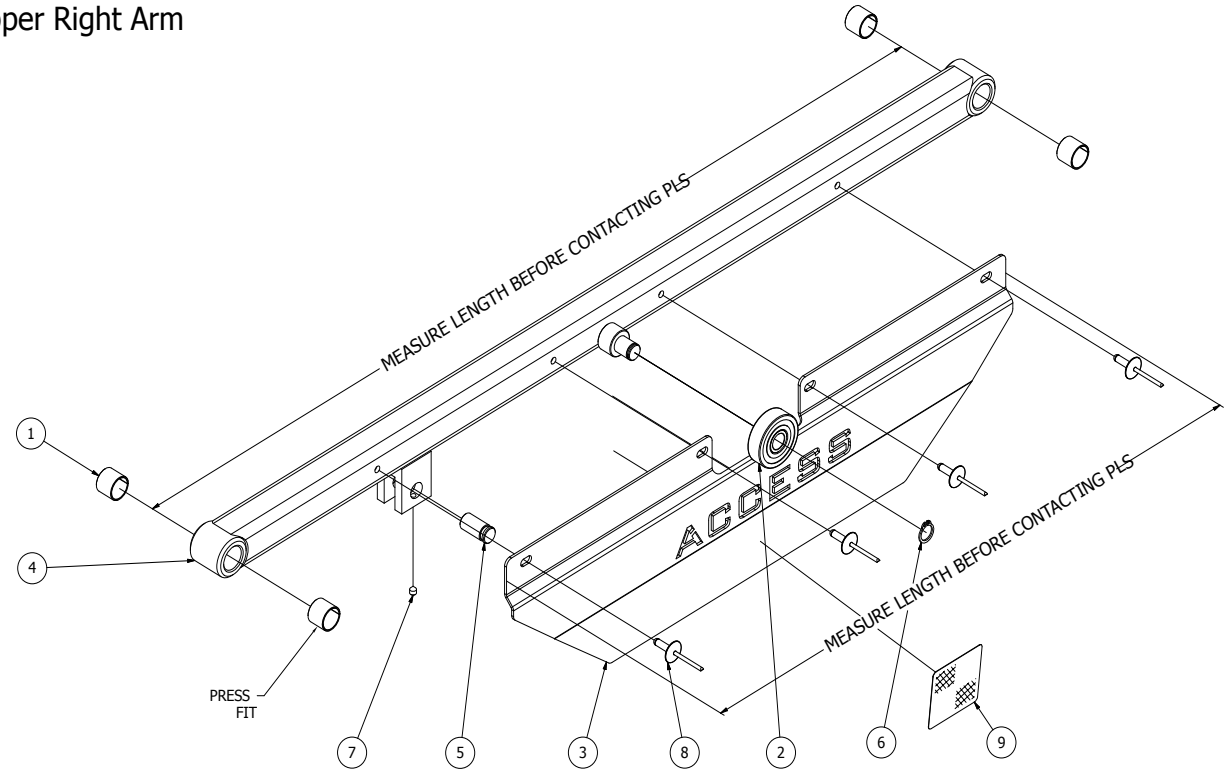

PARTS LIST			
ITEM	QTY	PART NUMBER	DESCRIPTION
1	4	ACC25641	Arm Glacier Bush 16x18x15
2	1	ACC26376	Arm Bearing 6203 2RS With Insert
3	1	Contact PLS	ACC Arm Guard
4	1	Contact PLS	ACC Upper Right Arm
5	1	ACCFABARM50267	ACC Arm Cylinder Pin
6	1	FASCC/1201	M12 External Circlip
7	1	FASGS/0501	M5 x 6mm Cup Point Grub Screw DIN 914
8	4	FASRV/0014	4.8 x 16 Large Flange Head Rivet
9	1	ACCPRISREFYELTAPE-Y	YELLOW REFLECTIVE PRISMATIC TAPE 50 x 50 x 50m

Note:- Fixings may vary

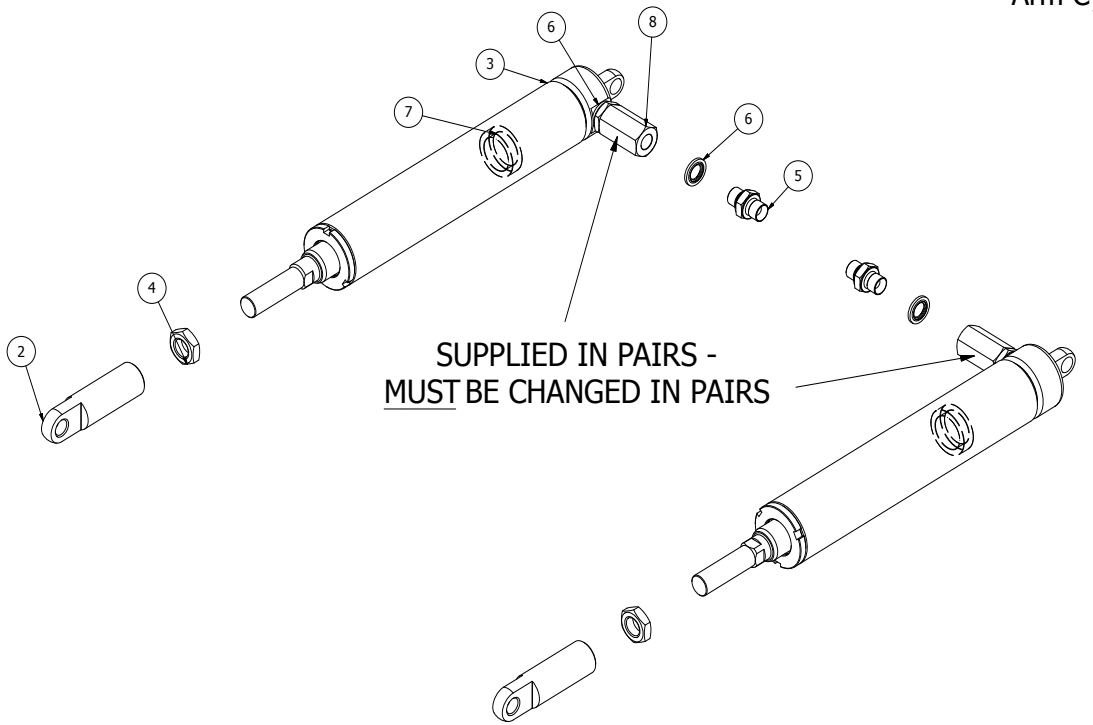

PARTS LIST			
ITEM	QTY	PART NUMBER	DESCRIPTION
2	2	ACCFABARM50295-000	ACC Cylinder Rod Clevis STD
3	2	ACCHYDCYL8962	Access Lite Cylinder (Mega 1)
4	2	FASNT/1603	M16 Half Nut
5	2	HYDFT/0004	1/4 BSP Male Male Straight
6	4	HYDWA/0001	1/4 BSP Dowty Seal (Bonded Washer)
7	2	Contact PLS	8962 Cylinder Spacer
8	1	ACC27119	PC Valves-100420-Crash Valve New Type (Pair)

Note:- Fixings may vary

Arm Brace

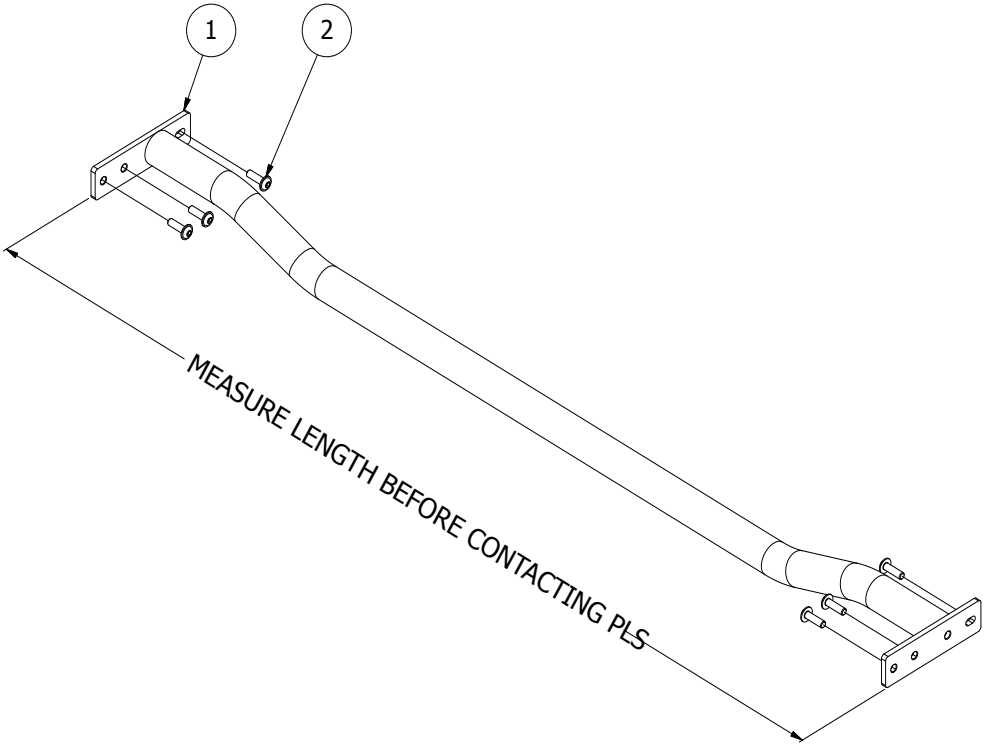

PARTS LIST			
ITEM	QTY	PART NUMBER	DESCRIPTION
1	1	Contact PLS	ACC Arm Stabilizer
2	6	FASBL/0624	M6 x 20 Socket Flange Dome Head A2

Note:- Fixings may vary

Bridge Plate Assembly

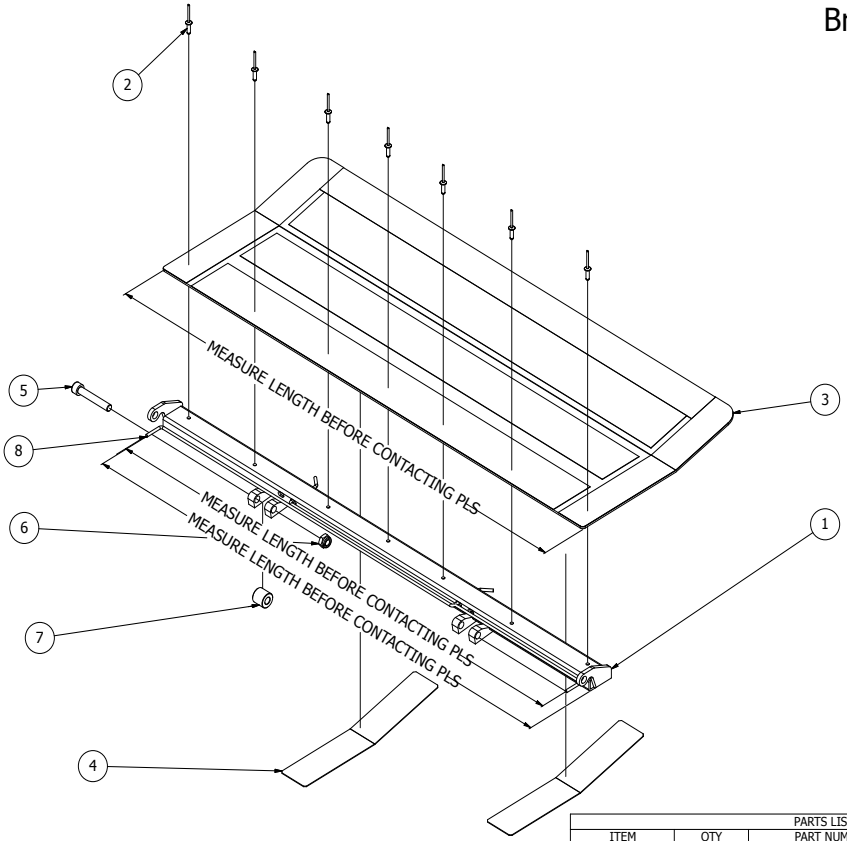

PARTS LIST			
ITEM	QTY	PART NUMBER	DESCRIPTION
1	1	Contact PLS	ACC Bridge Plate Hinge Lite
2	7	FASRV/0001	4.8 x 16 Dome Head Rivet
3	1	Contact PLS	ACC Bridge Plate Ally Assembly
4	0.295 m	ADSAT/0050	B160-T-005-050-G1 Tribo Tape 50mm wide - 50 Mtr Roll
5	1	FASBL/1005	Socket Capscrew M10 x 60 BZP
6	1	FASNT/1001	M10 Nyloc Nut
7	1	ACCFABBRP50530-22	ACC Bridge Plate Roller 22
8	2	Contact PLS	ACC Bridge Plate Torsion Bar

Note:- Fixings may vary

Bridge Plate Alloy

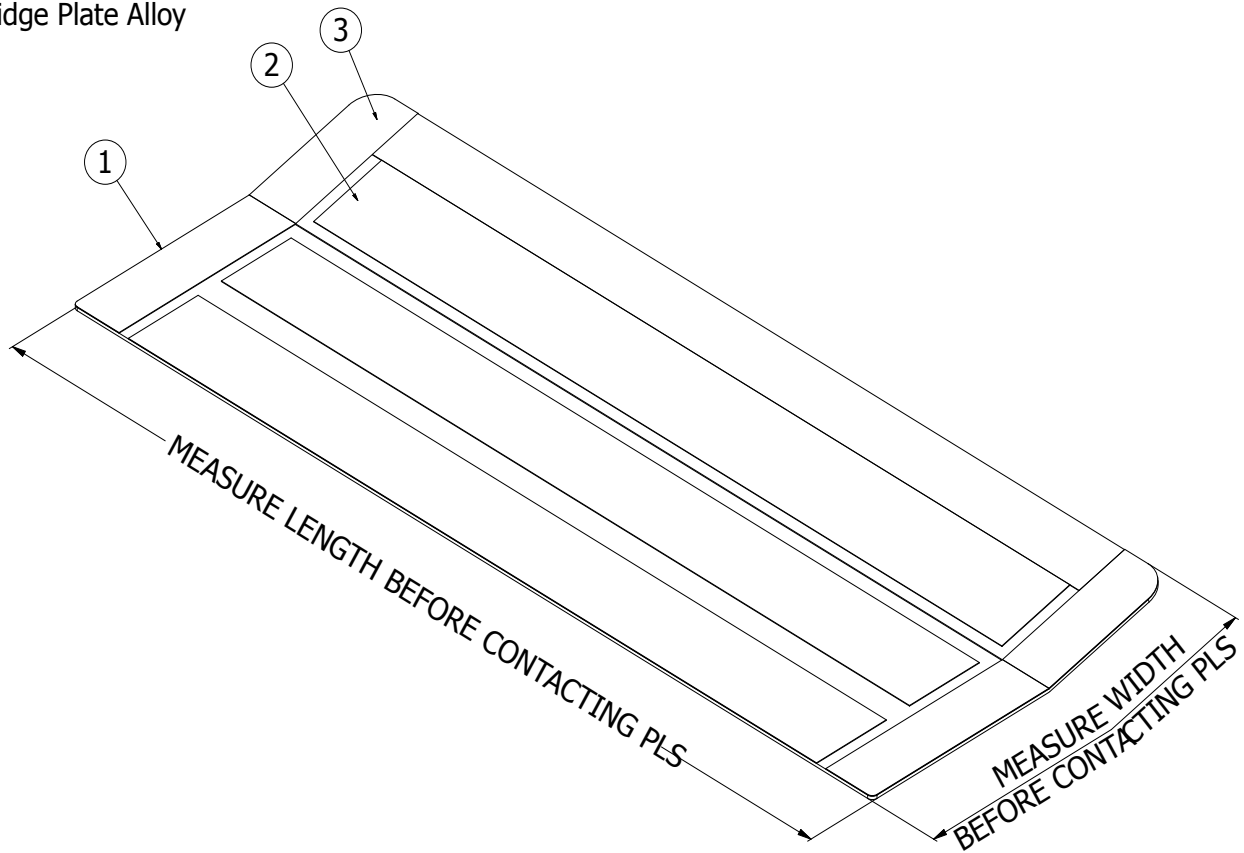

PARTS LIST			
ITEM	QTY	PART NUMBER	DESCRIPTION
1	1	Contact PLS	ACC Bridge Plate Folded Ally
2	3	HASCL/0740	Black Cleating 75 x 740mm
3	1.470 m	HASCL/0002	50mm Yellow Cleating Roll 18.3m

Note:- Fixings may vary

Platform "H" Single Mechanism

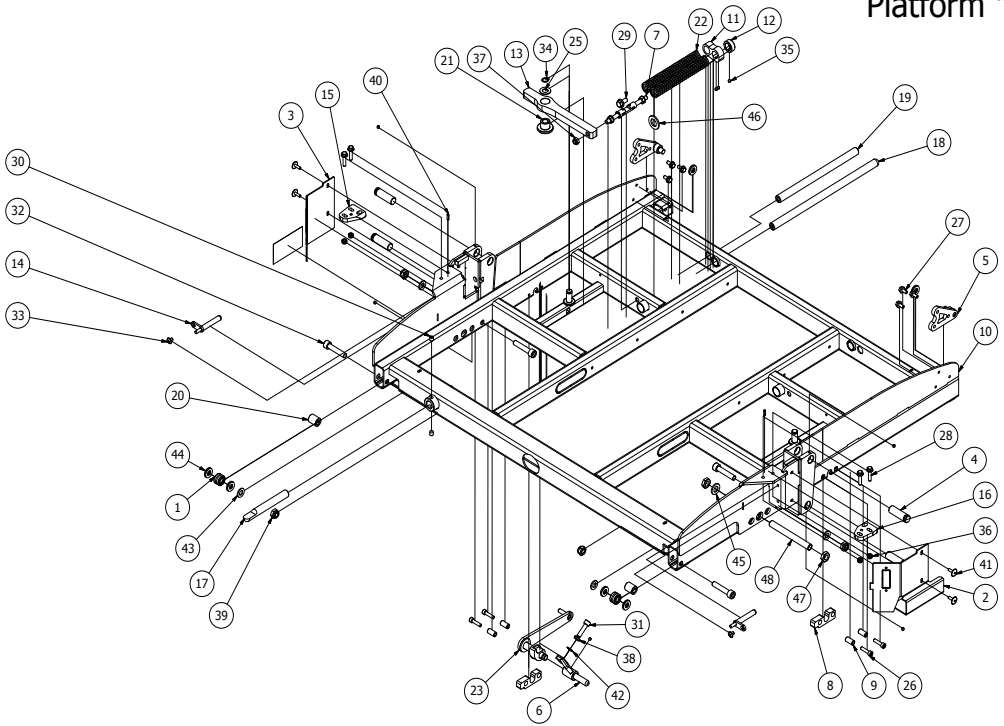

Note:- Fixings may vary

PARTS LIST			
ITEM	QTY	PART NUMBER	DESCRIPTION
1	2	ACC25542	Platform Bearing HF003 (NA49002-RS)
2	1	ACCALYPLA50349	ACC Platform Side Pod RH
3	1	ACCALYPLA50350	ACC Platform Side Pod LH
4	4	ACCFABARM50266	ACC Arm Pin Plain
5	2	ACCFABBRP50538	ACC Bridge Plate Hinge Plate Pivot
6	1	ACCFABBRP50539-LH	ACC Bridge Plate Adjuster Cam LH
7	1	ACCFABPLA50356	ACC Platform Swivel Joint
8	2	ACCFABPLA50370	ACC Crank Pivot Plate
9	4	ACCFABPLA50371	ACC Crank Pivot Plate Spacer
10	1	Contact PLS	ACC Platform Lite H
11	1	ACCFABPLA50336	ACC Platform Double Collar
12	1	ACCFABPLA50366	ACC Platform Single Collar
13	1	ACCFABPLA50347	ACC Platform Rocker Bar
14	2	ACCFABPLA50352	ACC Platform Handrail Pin
15	1	ACCFABPLA50355-LH	ACC Platform Handrail Block LH
16	1	ACCFABPLA50355-RH	ACC Platform Handrail Block RH
17	1	ACCFABPLA50358	ACC Dummy Pin High Cut
18	1	ACCFABPLA50364	ACC Platform Push Rod
19	1	ACCFABPLA50365	ACC Platform Double Push Rod
20	2	ACCFABPLA50368	ACC Platform Extension Roller
21	1	ACCPLAPLA50348	ACC Platform Rocker Bar Plug
22	2	ACCSPRPLA50333	ACC 200mm Stong Bridge Plate Spring
23	1	BRPACCASY510-0610-LH	ACC Bridge Plate Crank High LH Assembly
24	1	CONLB/0004	Small LOLER Sticker
25	1	FAS80087	M12 Form B Washer A2
26	4	FASBL/0605	M6 x 25 Socket Head Cap Screw
27	6	FASBL/0608	M6 X 12 CL100 HT HEX S/L Z/P
28	4	FASBL/0625	M6 X 25 CL100 HT HEX S/L Z/P
29	1	FASBL/0804	M8 x 16 CL 100 HT HEX S/L Z/P
30	2	FASBL/0814	M8 x 10mm Cup Point Grub Screw DIN 914
31	1	FASBL/0829	M8 x 30 Socket Head Cap Screw
32	4	FASBL/1041	M10 x 50 Socket Head Cap Screw
33	2	FASBL/9611	M6 x 8 Socket Large Flange Head Set A2
34	1	FASCC/1201	M12 External Circlip
35	8	FASGS/0501	M5 x 6mm Cup Point Grub Screw DIN 914
36	4	FASNT/0601	M6 Nylock Nut
37	1	FASNT/0801	M8 Nyloc Nut
38	1	FASNT/0802	M8 Half Nut
39	4	FASNT/1001	M10 Nyloc Nut
40	2	FASPN/0402	Selloc Pin 4 x 12
41	4	FASRV/0014	4.8 x 16 Large Flange Head Rivet
42	1	FASWA/0803	M8 Internal Star Washer
43	4	FASWA/1001	M10 Plain Washer Form A
44	12	FASWA/1091	M10 Nylon Washer Form A
45	1	FASWA/1201	M12 Plain Washer Form A
46	1	FASWA/1601	M16 Plain Washer Form A
47	2	HYDFT/0014	1/4 BSP Locknut (PLS10)
48	1	HYDOT/0001	1/4 BSP Barrel All thread (PLS14)

Platform Alloy

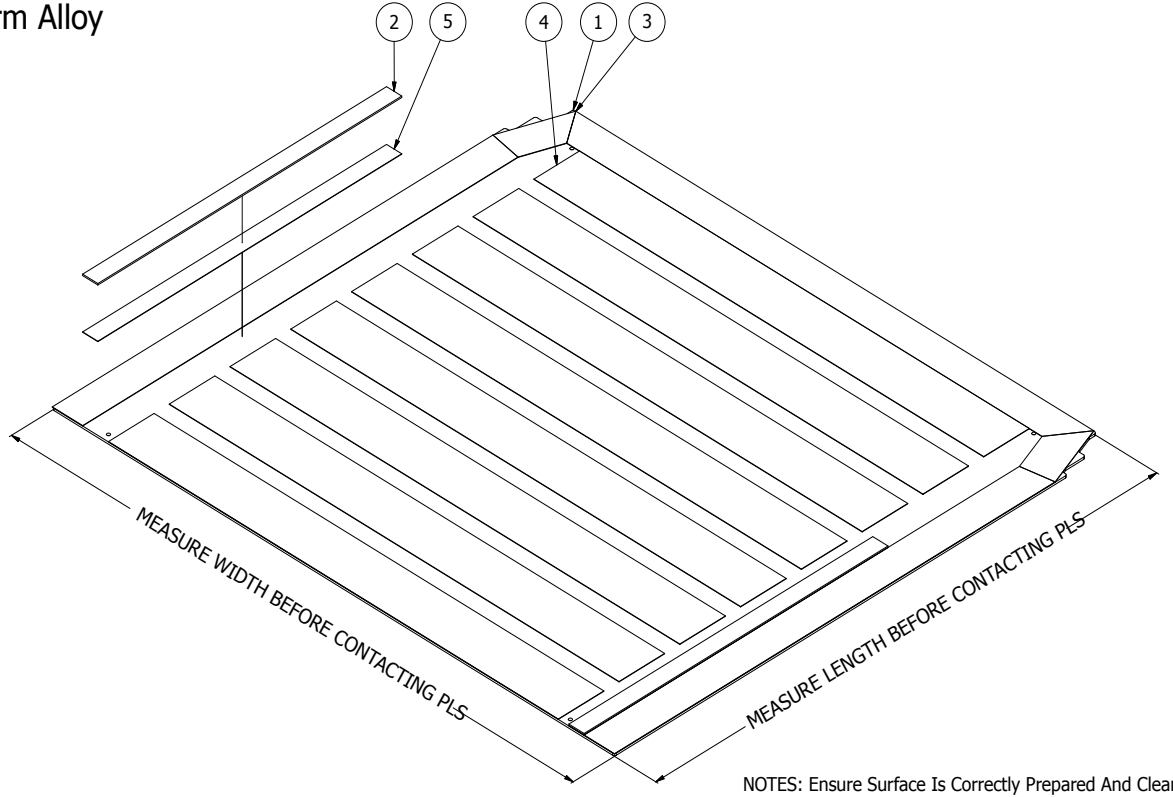

NOTES: Ensure Surface Is Correctly Prepared And Cleaned

PARTS LIST			
ITEM	QTY	PART NUMBER	DESCRIPTION
1	1	Contact PLS	ACC Platform Ally
2	2	ACC25742/A	Nylon Wear Strip 500 x 25 x 2mm
3	2.620 m	HASCL/0002	50mm Yellow Cleating Roll 18.3m
4	8	HASCL/0740	Black Cleating 75 x 740mm
5	1.000 m	PACTP/0001	25 mm Double Sided Tape / Glue

Note:- Fixings may vary

Platform Extension

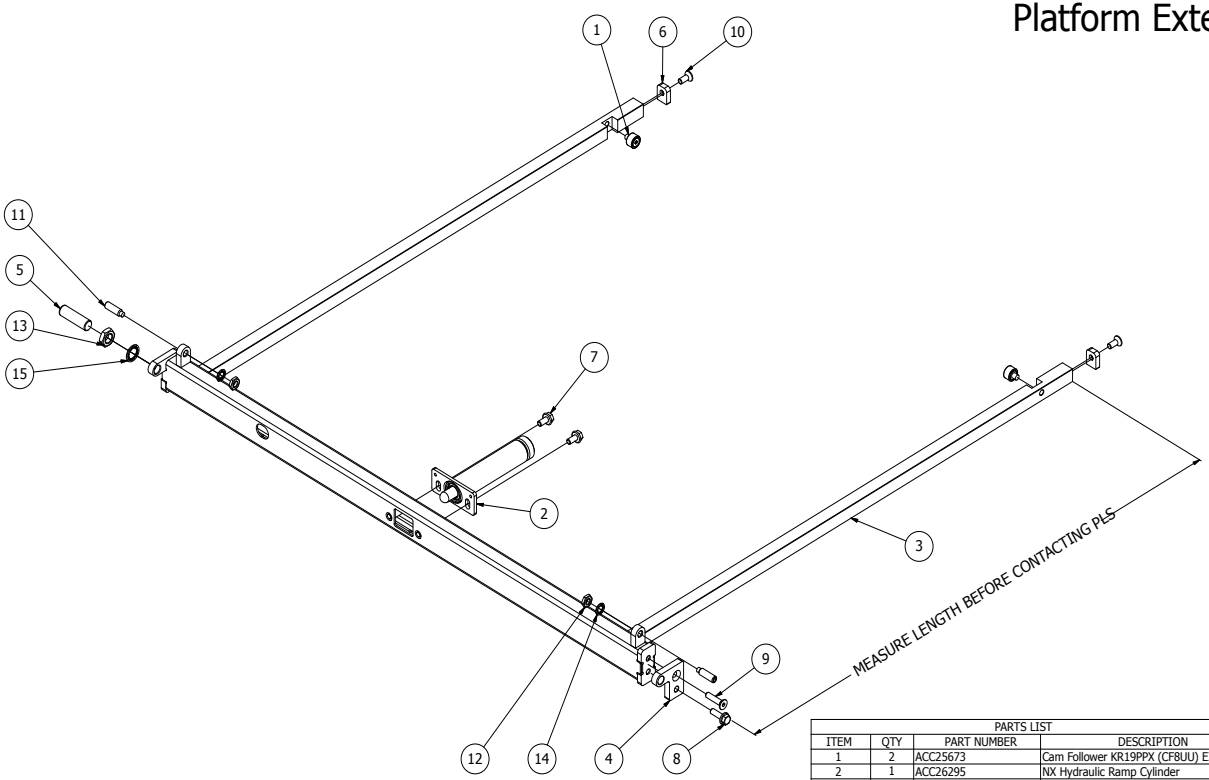

PARTS LIST			
ITEM	QTY	PART NUMBER	DESCRIPTION
1	2	ACC25673	Cam Follower KR19PPX (CF8UU) EXTENSION
2	1	ACC26295	NX Hydraulic Ramp Cylinder
3	1	Contact PLS	ACC Extension Frame Lite
4	1	ACCFABEXT50431-RH	ACC Extension Ramp Hinge Plate RH
5	1	ACCFABEXT50433	ACC Extension Lock Pin
6	2	ACCFABEXT50434-MS	ACC Platform Extension Stop Mild Steel 25mm
7	2	FASBL/0804	M8 x 16 CL 100 HT HEX S/L Z/P
8	1	FASBL/0805	M8 x 25 CL100 HT HEX S/L Z/P
9	1	FASBL/0806	M8 x 35 Socket Head CSK
10	2	FASBL/0823	M8 x 20 Socket Head CSK
11 OR 11	2 2	FASBL/1040 FASOL/1230	M10 x 35 Steel Socket Set M12 x 30 S/Steel Socket Set
12	2	FASNT/1003	M10 Half Nut
13	1	FASNT/1603	M16 Half Nut
14	2	FASWA/1003	M10 Internal Star Washer
15	1	FASWA/1603	M16 Internal Star Washer

Note:- Fixings may vary

Extension Alloy

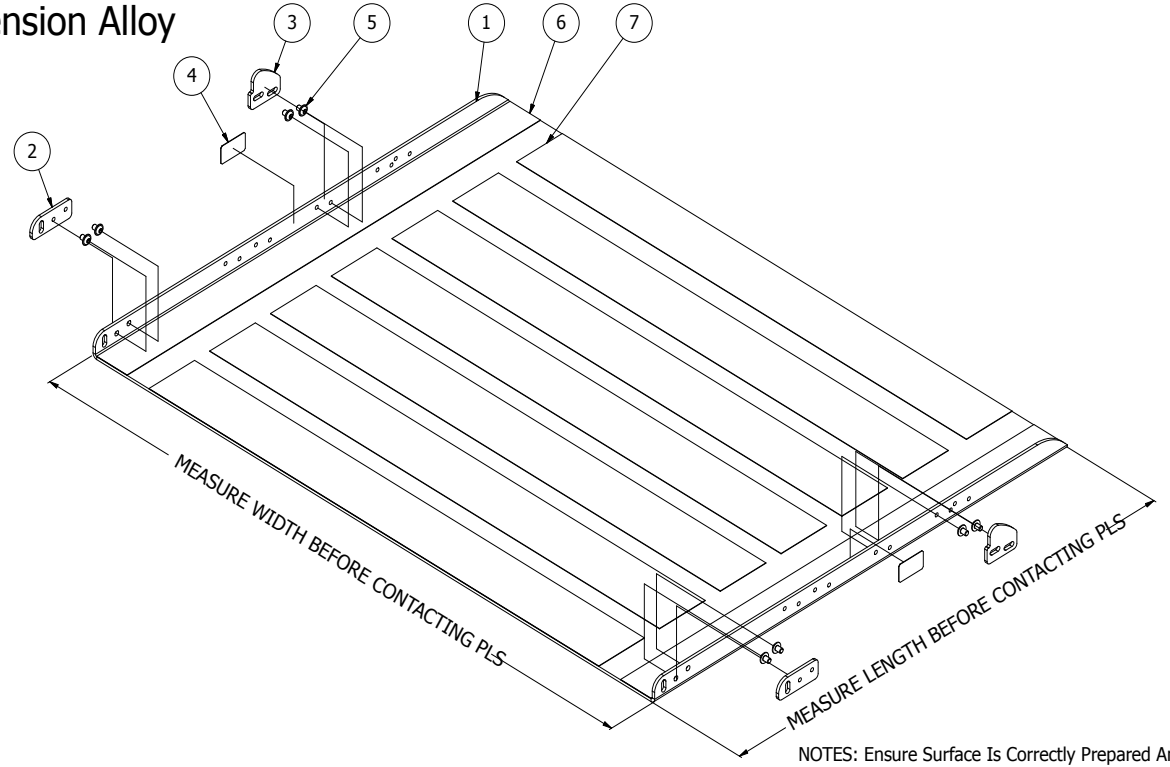

NOTES: Ensure Surface Is Correctly Prepared And Cleaned

PARTS LIST			
ITEM	QTY	PART NUMBER	DESCRIPTION
1	1	Contact PLS	ACC Extension Aluminum
2	2	Contact PLS	ACC Extension End Plate
3	2	Contact PLS	ACC Extension Handrail Stop
4	0.048 m	ACCH3418	Handrail H3418 Tape 40mm x 18.3m Black
5	8	FASBL/9611	M6 x 8 Socket Large Flange Head Set A2
6	1.400 m	HASCL/0002	50mm Yellow Cleating Roll 18.3m
7	7	HASCL/0740	Black Cleating 75 x 740mm

Note:- Fixings may vary

Extension Pipe and Hose

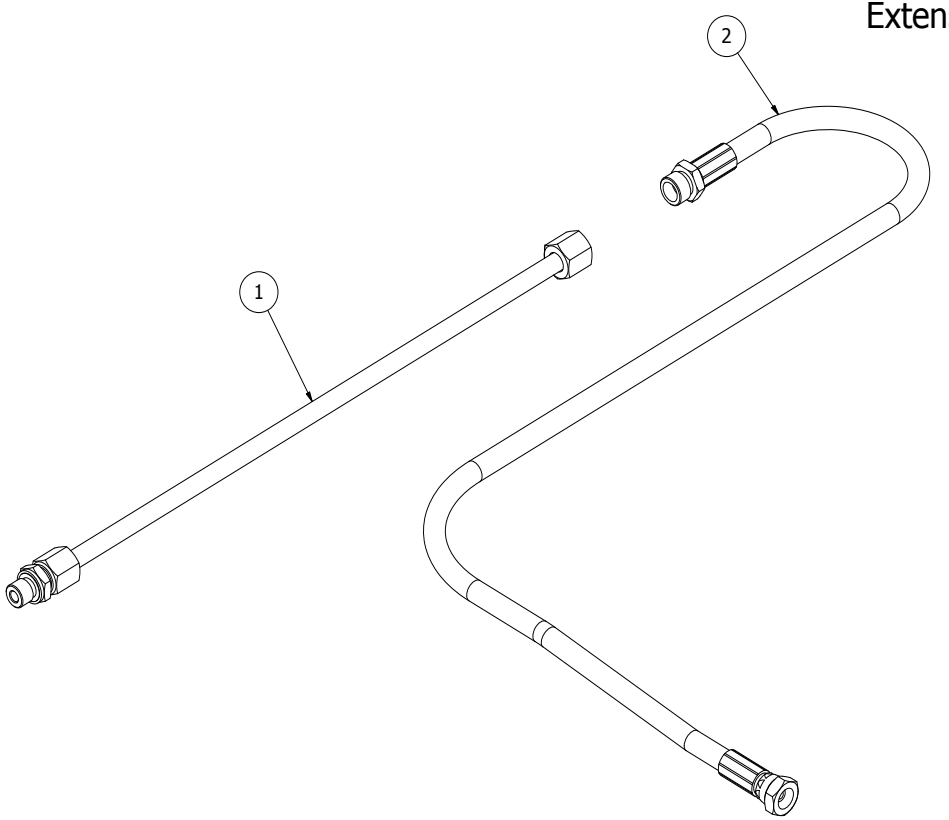

PARTS LIST			
ITEM	QTY	PART NUMBER	DESCRIPTION
1	1	ACC26199-T	10 x 1.5 x 395mm Extension Tube
2	1	ACCHYDHOS530-005-885	ACC Extension Pipe Hose 885

Note:- Fixings may vary

Roll-Off-Ramp

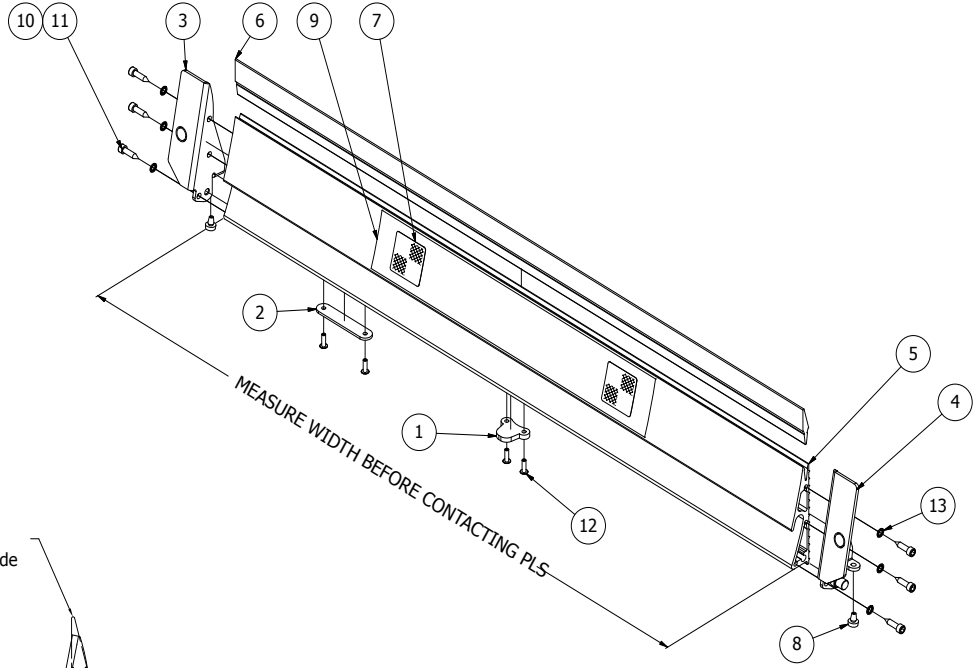

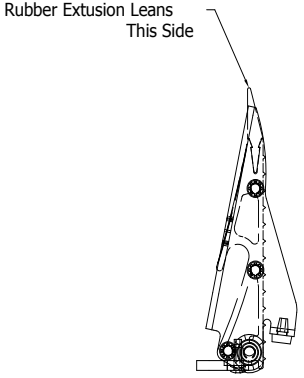

PARTS LIST			
ITEM	QTY	PART NUMBER	DESCRIPTION
1	1	ACCFABROR50654	ACC Piston Plate
2	1	ACCFABROR50655	ACC 3mm Dummy Plate
3	1	ACCFABROR50656-LH	ACC Roll Off Ramp Hinge Plate LH
4	1	ACCFABROR50656-RH	ACC Roll Off Ramp Hinge Plate RH
5	1	Contact PLS	ACC Extruded Ramp 2015
6	1	Contact PLS	ACC Extruded Ramp 2015
7	2	ACCPRISREFREDTAPE-R	RED REFLECTIVE PRISMATIC TAPE 50 x 50 x 50m
8	2	CONEC/0001	Handrail Rubber Stop
9	1	CONLB/0014	Access Ramp Sticker PLS314
10	0.005 l	ADTHR/0001	A1042 Threadlock Adhesive Permabond 50ml
11	6	FASSC/9001	6.3 x 25mm A2 Socket Cap Head Self Tapper (per 100)
12	4	FASRV/0001	4.8 x 16 Dome Head Rivet
13	6	FASWA/0603	M6 Internal Star Washer

Note:- Fixings may vary

External Enclosed Pack Horizontal Position

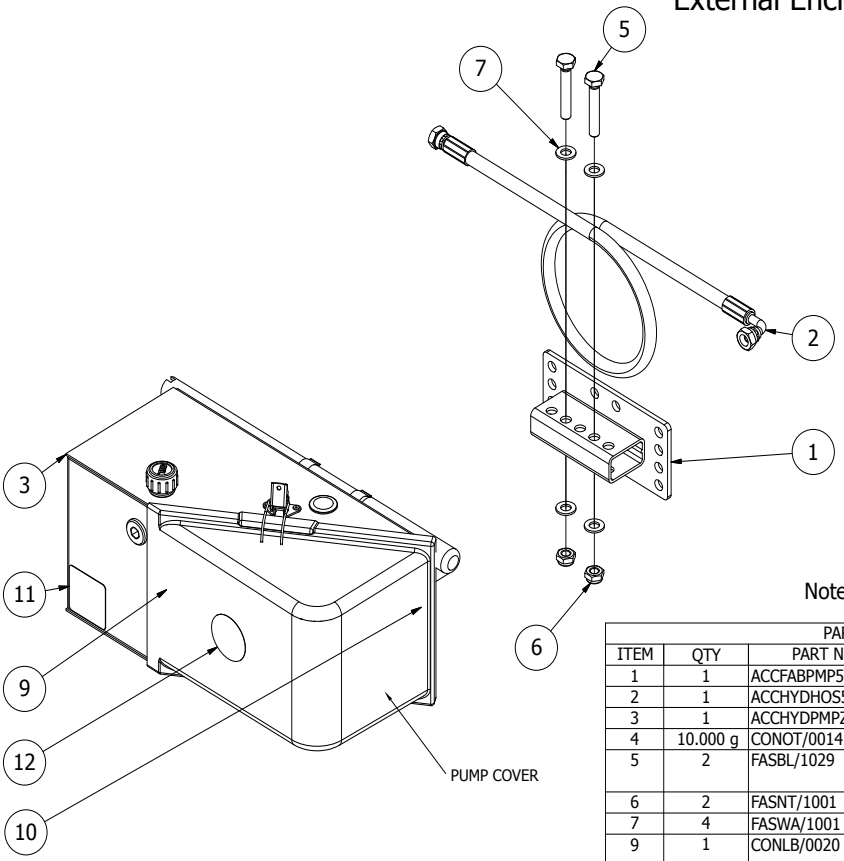

Note: Oil Supplied Separately

PARTS LIST			
ITEM	QTY	PART NUMBER	DESCRIPTION
1	1	ACCFABPMP50840	ACC External Pump Bracket
2	1	ACCHYDHOS530-001-700	ACC Outer Box Hose 700
3	1	ACCHYDPMPZEF12/24	RFP Enclosed Pack 12V/24V
4	10.000 g	CONOT/0014	500g Petroleum Jelly
5	2	FASBL/1029	M10 x 60 Hex Head Set Screw
6	2	FASNT/1001	M10 Nyloc Nut
7	4	FASWA/1001	M10 Plain Washer Form A
9	1	CONLB/0020	AF26 Alu Foil w/on Labels Serial No. (Pack 350)
10	1	CONLB/0002	WL28 LABEL LEGEND TESTED (PACK 350)
11	1	CONLB/0003	This Way Up & PLS Blue Sticker
12	1	ACC26469	Vinyl Round PLS Label

Note:- Fixings may vary

Internal Enclosed Pack Vertical Position

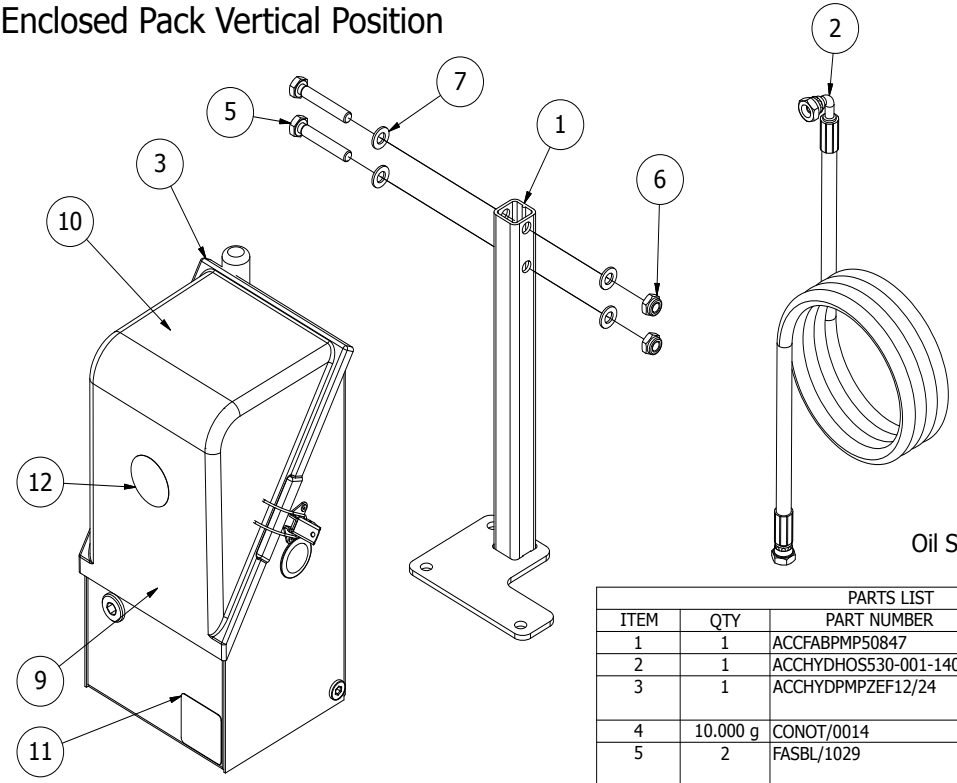

Notes:
Oil Supplied Separately

PARTS LIST			
ITEM	QTY	PART NUMBER	DESCRIPTION
1	1	ACCFABPMP50847	ACC Internal Pump Bracket
2	1	ACCHYDHOS530-001-1400	ACC Outer Box Hose 1400
3	1	ACCHYDPMPZEF12/24	RFP Enclosed High Pressure Pack 12V/24V
4	10.000 g	CONOT/0014	500g Petroleum Jelly
5	2	FASBL/1029	M10 x 60 Hex Head Set Screw
6	2	FASNT/1001	M10 Nyloc Nut
7	4	FASWA/1001	M10 Plain Washer Form A
9	1	CONLB/0020	AF26 Alu Foil w/on Labels Serial No. (Pack 350)
10	1	CONLB/0002	WL28 LABEL LEGEND TESTED (PACK 350)
11	1	CONLB/0003	This Way Up & PLS Blue Sticker
12	1	ACC26469	Vinyl Round PLS Label

Note:- Fixings may vary

Standard Handset Kit

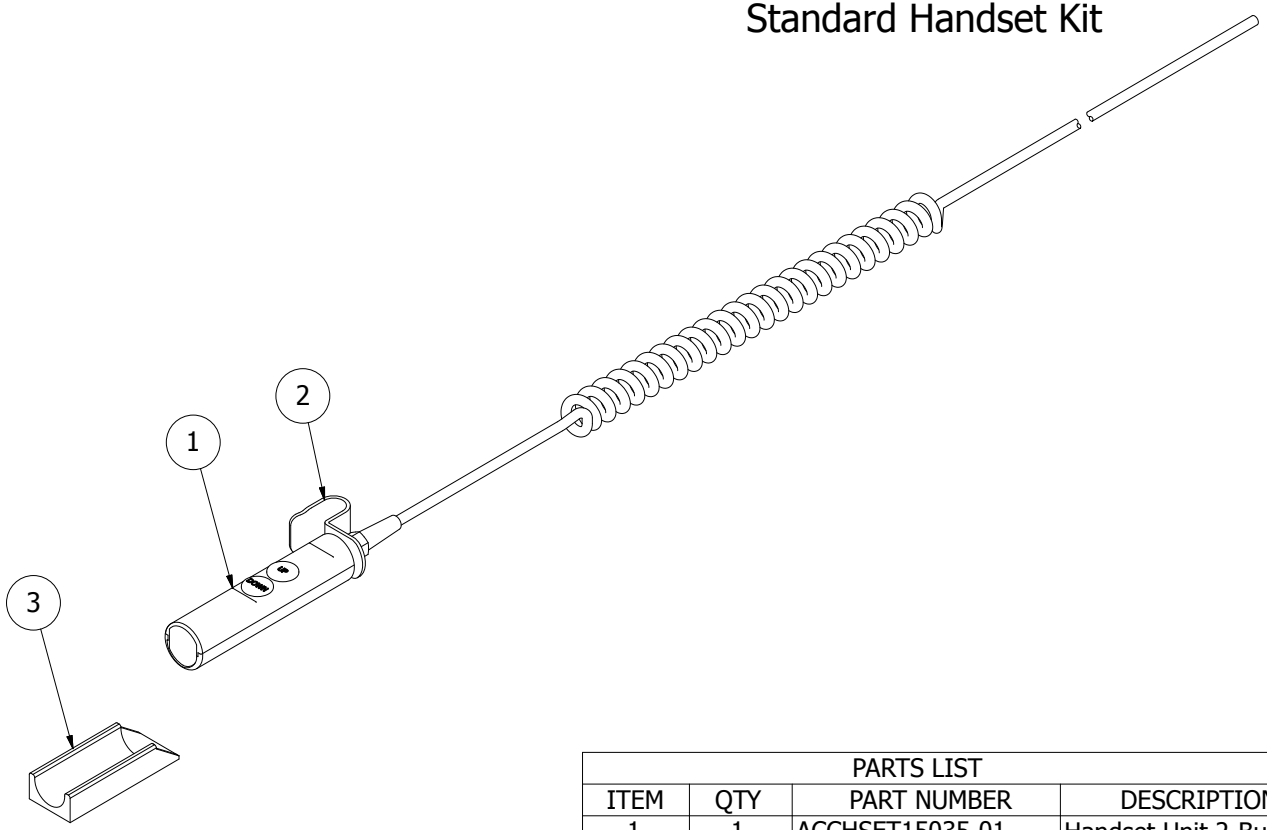

PARTS LIST			
ITEM	QTY	PART NUMBER	DESCRIPTION
1	1	ACCHSET15035-01	Handset Unit 2-Button 1mm>2
2	1	ACCALYHAN50735	ACC Standard Handset Hook
3	1	ACC25631	Holster

Note:- Fixings may vary

Handset Kit

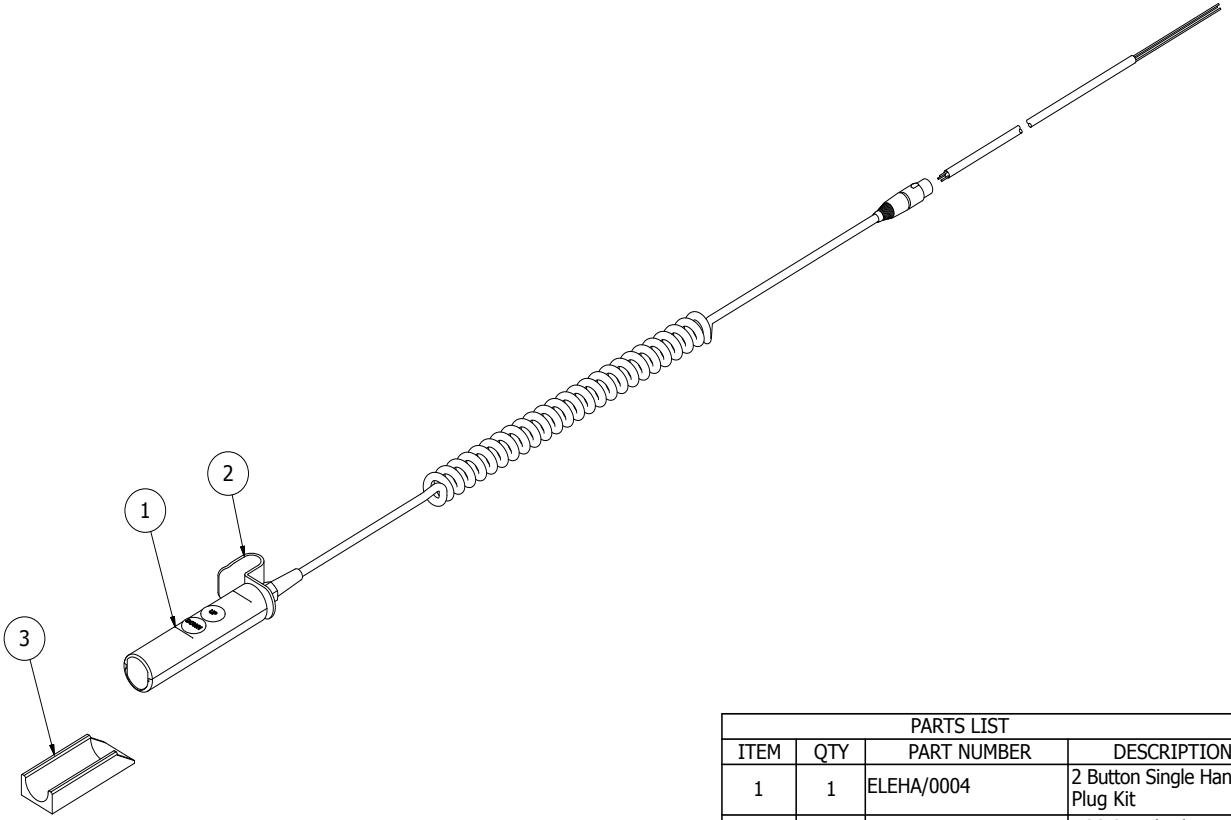

PARTS LIST			
ITEM	QTY	PART NUMBER	DESCRIPTION
1	1	ELEHA/0004	2 Button Single Handset Plug Kit
2	2	ACCALYHAN50735	ACC Standard Handset Hook
3	1	ACC25631	Holster

Note:- Fixings may vary

PLS

A MOBILITY
NETWORKS COMPANY

Passenger Lift Services Limited
Unit 2, Summit Crescent Ind. Est., Off Roebuck Lane, Smethwick, West Midlands B66 1BT. U.K.
Tel: +44 (0)121 552 0660 Fax: +44 (0)121 552 0200
E-mail: enquiries@pls-access.co.uk Web Site: www.passengerliftservices.co.uk